ADDENDUM NO. 1

San Rafael City Schools
Terra Linda High School
Innovation Hub

Date:	27 November 2018
Owner:	San Rafael City Schools 310 Nova Albion Way San Rafael, CA 94903
Project:	Terra Linda High School Innovations Hub 320 Nova Albion Way San Rafael, CA 94903
Architect:	Harley Ellis Devereaux 417 Montgomery Street, Suite 400 San Francisco, CA 94104

By: Michael J. Myers, AIA

This Addendum has been prepared to clarify, modify, delete, or add to the drawings and/or specifications for the above referenced project, and revisions to items listed here shall supersede description thereof prior to the above stated date. All conditions not specifically referenced here shall remain the same. It is the obligation of the Prime Contractor to make subcontractors aware of any items herein that may affect submitted bids.

Acknowledge receipt of this addendum by inserting its number and date in the Bid Form. Failure to do so may subject bidder to disqualification.

All addenda items refer to the drawings and specifications unless specifically noted otherwise.

TOTAL PAGES IN THIS ADDENDUM (excluding attachments): 5

PART B – CHANGES TO PROCUREMENT AND CONTRACTING REQUIREMENTS

AD-1.B01 THE BID DUE DATE HAS BEEN EXTENDED TO DECEMBER 12, 2018 at 2:00pm.

AD-1.B02 The Pre-Bid Walk Meeting Sign-in Sheet is attached.

AD-1.B03 The Construction Logistics Plan is attached.

PART C – CHANGES TO SPECIFICATIONS

AD-1.C01 Section 08 41 13 – Aluminum Framed Entrances and Storefronts. Replace Section 08 41 13 in its entirety and replace with attached 08 41 13.

AD-1.C02 Section 09 72 00 – Wall Coverings. Add Section 09 27 00 to the contract documents.

PART D – CHANGES TO DRAWINGS

AD-1.D01 Drawing C-101 – Grading and Drainage Plan: Replace C-101 with attached C-101.

AD-1.D02 Drawing S2.1 – Foundation Plan & Roof Framing Plan: Replace S2.1 with attached S2.1.

AD-1.D03 Drawing S5.1 – Details: Replace S5.1 with attached S5.1.

AD-1.D04 Drawing A-101 – Improvement Floor Plan: Replace A-101 with attached A-101.

AD-1.D05 Drawing A-121 – Reflected Ceiling Plan: Replace A-121 with attached A-121.

AD-1.D06 Drawing A-561 – Door Details: Replace A-561 with attached A-561.

AD-1.D07 Drawing A-562 – Window Details: Replace A-562 with attached A-562.

AD-1.D08 Drawing A-601 – Schedules, Door and Frame Types: Replace A-601 with attached A-601.

AD-1.D09 Drawing A-602 – Window Schedule: Replace A-602 with attached A-602.

AD-1.D10 Drawing M201 – Mechanical Floor Plan and Section: Replace M201 with attached M201.

AD-1.D11 Drawing E2.1 – Power Plan: Replace E2.1 with attached E2.1.

AD-1.D12 Drawing E3.1 – Signal Plan: Replace E3.1 with attached E3.1.

AD-1.D13 Construction record drawings are available for reference at the following link:

https://www.dropbox.com/s/pjsr531if6jssoh/Terra%20Linda%20HS_Bldgs%20M%20%26%20E.pdf?dl=0

PART E – BIDDER QUESTIONS

Question 1: Provide construction boundaries of the site in the courtyard area.

Answer: See attached C-101.

Question 2: Provide allowable work area in the existing corridor at GL A&B, between GL 5 & 11.5.

Answer: Main corridor work to be completed during non-school hours or during school holidays.

Question 3: In review of plan sheet C101 and A101, the courtyard configuration is not the same. Please confirm the correct layout.

Answer: See attached C-101.

Question 4: Plan sheet C101 calls out new grassy swale along GL 5&13 as well as new DI in the center section. There is existing landscape in place. Please provide a site demo plan of the courtyard area.

Answer: See attached C-101.

Question 5: Provide typical wall framing detail for new walls indicated without wall detail notes.

Answer: See attached A-101.

Question 6: At rooms 110A,B&C, there is existing wallpaper currently installed. These rooms are noted to receive new paint only. Clarify the intent.

Answer: See attached A-601 and spec section 09 72 00. The wallcovering should be replaced with new wallcovering.

Question 7: Provide ceiling heights for rooms E3 & E4.

Answer: See attached A-121.

Question 8: At the plaster walls in the courtyard there is no waterproofing detail noted for the vertical edge of the plaster at columns 6-11. Please provide detail for the edge termination at the columns.

Answer: See attached A-561.

Question 9: Provide overall height of the detailed corner guards.

Answer: Align with top of door frame.

Question 10: Materials behind plaster and weather barrier is not noted. Please advise what this material is, including thickness and grade.

Answer: See Spec 07 25 00 – Weather Barriers.

Question 11: Metal stud note 1 refers to plan sheets D5.1 and D5.2 for typical metal stud framing and notes. Please provide these sheets.

Answer: The sheets referenced should be A-521 and A522 and not D5.1 and D5.2.

Question 12: What is the flashing material below the aluminum storefront system?

Answer: 0.0167" thick aluminum with finish to match storefront system.

Question 13: What material species is the ¾" x 2-1/2" wood trim? What finish is desired.

Answer: Maple with a stained finish.

Question 14: There is a concrete curb noted, is this an existing curb? If not, please provide the locations, details associated with this curb. Please indicate on the appropriate A and S sheets.

Answer: The curb is a new curb. See attached sheet A-562.

Question 15: Detailed AC Curb does not indicate mounting requirements. Please confirm all structural requirements under the AC curb, including deck penetration reinforcing, support framing under roof, flashing details, etc. Does the existing roof slope and are levelers required? If so, provide mounting details.

Answer: See attached S5.1.

Question 16: Does this project have a DVBE goal associated with it? We are not certain if this project is "partially State Funded" and thereby requires a DVBE good faith effort.

Answer: DVBE is required.

Question 17: Could the district provide GMH Builders with an electronic copy of the Geotechnical Investigation Report referenced in the Project Manual?

Answer: Geotechnical Report is included with this addendum.

Question 18: Please provide information for manufacturer and color for the following:

KN 4, 12/A-401 what is the finish for the counter?

KN 2, A-401 what is the p-lam finish for the wall panels?

KN 2, A-401 are the panels laminate or FRP as would seem to be indicated on 5/A-591.

5/A-591 makes reference to a detail on 5/D9.3 but this page is not part of the plan set.

1/A-402 and 4/A-402 what are the finishes for the upper cabinets, lower cabinets and counters?

Answer: The plastic-laminate counters and wall panel colors will be chosen during construction.

The wall panel are plastic-laminate and not FRP.

The correct reference on 5/A-591 is to be 17/A-591 and not 5/D9.3.

Question 19: Sheet M201 has a callout for sheet notes 1 thru 7 on the floor plan. Where are these sheet notes?

Answer: See attached M-201.

Question 20: The equipment schedule for AC-E4 shows power exhaust but does not show a VFD. The control diagram on M003 shows a VFD for the power exhaust. Which is correct and who provides this VFD?

Answer: CANFAB Power Exhaust comes with a VFD.

Question 21: Section 230900 paragraph 1.1.A calls for Alerton HVAC controls but paragraph 2.1.A calls for Automated Logic Controls. Which is correct?

Answer: Alerton Controls is correct.

Question 22: Would a BACnet interface on the board unit controls be an acceptable alternate to the control diagram as shown on M003?

Answer: No.

Question 23: Please specify the existing manufacturer and model for the clock and speakers? E4.1 Note 3 states that clock and speakers shall match existing.

Answer: The clocks and speakers are relocated Sapling models from the existing spaces.

Question 24: What is the ceiling finish in the following rooms: E-8, E-9, E-10, E-11, E-12? A-601 finish schedule refers to these as ACT

Answer: The ceilings should be gypsum wallboard.

Question 25: Can you clarify which aluminum storefront will be used for the project? A-561 shows offset glazing and A-562 shows center glazing. Also, can you provide a spec for the awing windows? Which glass types will be used in each window type?

Answer: See attached spec section 08 41 13. See attached A-602 for glass type locations.

Question 26: What is the size of the existing water line that we would be connecting to for the new water fountain?

Answer: The size is unknown & would need to be field verified.

Question 27: What is the District construction cost projection for this project?

Answer: The District estimate is $2.4 million.

ATTACHMENTS

Pre-Bid Walk Meeting Sign-in Sheet
Logistics Plan
Section 08 41 13 – Aluminum Framed Entrances and Storefronts
Section 09 72 00 – Wall Coverings
C-101 – Grading and Drainage Plan
S2.1 – Foundation Plan & Roof Framing Plan
S5.1 – Details
A-101 – Improvement Floor Plan
A-121 – Reflected Ceiling Plan
A-561 – Door Details
A-562 – Window Details
A-601 – Schedules, Door and Frame Types
A-602 – Window Schedule
M201 – Mechanical Floor Plan and Section
E2.1 – Power Plan
E3.1 – Signal Plan

END OF ADDENDUM

San Rafael City Schools
Terra Linda High School Innovations Hub
Pre-Bid Site Walk Meeting Sign In Sheet
November 19, 2018 at 3:30 PM

COMPANY/FIRM NAME	ATTENDEE NAME (PERSON)	EMAIL ADDRESS	PHONE #	FAX #
GCCI inc	Dallas Gatton	Kristen@gcciinc.com	(707)545-2134	(707) 545-2156
Ridgeview Builders	DAN Black	RIDGEVIEW@SONIC.NET	707-537-8861	707 537-8984
Sausal Corporation	Justin Holstlaw	Justin@sausal.NET	925-568-2200	925-568 2525
BHM Construction	Grant Whatston	bidse bhmconstruction.com	707 643-4580	4581
GECO Inc	Michael Lombozo	gecoinc@yahoo.com	4152990280	4158840760
FRC, Inc	Gina Tomrose	gina@frcinc.biz	707 837.5065	707 837 50
KCK Builders	Mike Hannegan	mhannegan@kckbuilders.com	415/454-8698	415 453-9258
Thompson Builders Corporation	Shannon Thompson	Sharynm@tbcorp.com	(415) 456-8972	
Bell Products Inc	Rolando Roldan	roldan@bellproducts.com	707-255-1811	707-255-1901
Alten Construction Inc.	Peter Dickinson	bids@altenconstruction.com	510-234-4200	510-234-4221
Carpenters Union	Cesar Sanchez	csanchez@nccic.org	510-813-2056	—
GMH Builders	Kevin Heddy	Kevin@GMHBuild.com	707-757-5050	—
GMH Builders	Dan Hannan	DAN@GMHBUILD.COM	707-708-1010	
Broderick General Engineering	Anthony Mulas	Anthony@Brodericke.com	7078490115	
Scott Electric	Kaithyn Lynch	Klynch@scottelectric.com	415-206-7120	
~~Leelee NG~~ Marcon Builder	Leelee NG	leelee@marconcompany.com	510-639-1914	510-639-1915

Firm	Name	Email	Phone	Fax
Arntz Buildings, Inc	JP Van Zee	bid@arntzbuildings.com	~~415~~ 382-1188	
E.F. Brett	Adam Coll	adamc@efbrett.com	415 302 7035	
Highpoint Acoustic	Chris Schmidt	Chris@highpointacoustic.com	707-889-1701	
Sierra School Equipment Co.	Kevin McDermott	kevinmcdermott@ssecinc.com	661-747-5635	

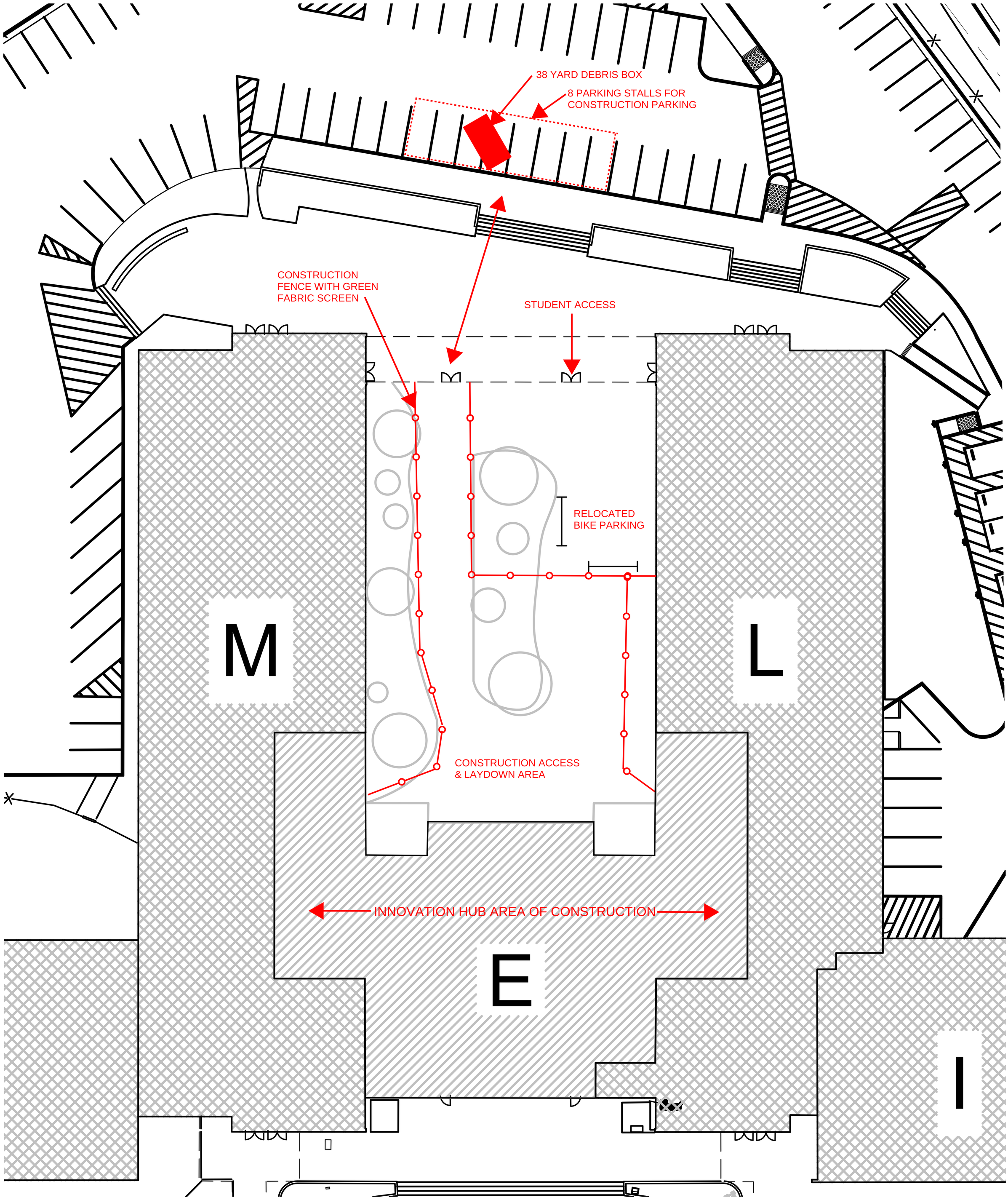

HED
417 Montgomery Street
Suite 400
San Francisco, CA 94104
(415) 981-2345

TITLE: LOGISTICS PLAN

DLM HED PROJ. # 2017-03489-000

PROJECT: TERRA LINDA HS INNOVATION HUB

SCALE: NTS

DATE: 9.25.18

SECTION 08 41 13 ADDENDUM 1

ALUMINUM-FRAMED ENTRANCES AND STOREFRONTS

PART 1 - GENERAL

1.1 SUMMARY

A. Section Includes:

1. Storefront framing, fixed window framing, and operable project-out vents.
2. Manual-swing entrance doors and door-frame units.

B. Related Documents: The Conditions of the Contract and Division 1 apply to this section as fully as if repeated herein.

C. Related Sections:

1. Document 00 01 08 “Deferred Approval Items.”
2. Section 05 40 00 “Cold-formed Metal Framing.”
3. Section 07 42 13.19 “Insulated Metal Spandrel Panels.”
4. Section 07 92 00 “Joint Sealants.”
5. Section 08 71 00 “Door Hardware.”
6. Section 08 80 00 “Glazing”.
7. Section 09 22 16 “Non-Structural Metal Framing.”

1.2 REFERENCES

A. The editions of the specifications and standards referenced herein, published by the following organizations, apply to the work only to the extent specified by the reference. Refer to Section 01 42 19 for information concerning availability and use of references.

Aluminum Association (AA)
ASTM International (ASTM)
Architectural Aluminum Manufacturers Association (AAMA)
The Society for Protective Coatings (SSPC)

1.3 ACTION SUBMITTALS

A. Product Data: For each type of product.

1. Include construction details, material descriptions, dimensions of individual components and profiles, and finishes.

B. Shop Drawings: For aluminum-framed entrances and storefronts. Include plans, elevations, sections, full-size details, and attachments to other work.

1. Include details of provisions for assembly expansion and contraction and for draining moisture occurring within the assembly to the exterior.
2. Include full-size isometric details of each vertical-to-horizontal intersection of aluminum-framed entrances and storefronts, showing the following:

a. Joinery, including concealed welds.
b. Anchorage.

c. Expansion provisions.
d. Glazing.
e. Flashing and drainage.

3. Show connection to and continuity with adjacent thermal, weather, air, and vapor barriers.

C. Structural Calculations: Along with the shop drawings, submit structural calculations prepared, signed and sealed by a structural engineer registered in California. Calculations shall show that storerfront framing and anchorage will withstand the wind, dead, seismic, and other loads specified herein. Design members in accordance with 2016 CBC Chapters 20 and 22A with allowable stresses not to exceed yield stresses stated therein. Show section property computations for all framing members.

D. Fabrication Sample: Of typical vertical-to-horizontal intersection of aluminum-framed systems, made from 12" lengths of full-size components and showing details of the following:

1. Joinery, including concealed welds.
2. Anchorage.
3. Expansion provisions.
4. Glazing.
5. Flashing and drainage.

E. Installation Instructions: Provide complete diagrams, templates, and installation instructions as required for the installation of the storefront system, in sufficient time so that backing, framing, and formwork can be properly installed, and so that the work of other trades will not be delayed.

F. Entrance Door Hardware Schedule: Prepared by or under supervision of supplier, detailing fabrication and assembly of entrance door hardware, as well as procedures and diagrams. Coordinate final entrance door hardware schedule with doors, frames, and related work to ensure proper size, thickness, hand, function, and finish of entrance door hardware.

G. Submittal procedures and quantities are specified in Section 01 33 00.

1.4 DIVISION OF STATE ARCHITECT DEFERRED APPROVAL

A. Deferred approval required for all storefront window units with spans greater than 10 feet.

B. After Architect has reviewed the shop drawings and materials prepared and provided by Contractor for the Deferred Approval item, Architect will forward those materials to Division of the State Architect (DSA) for their review and comment.

C. Contractor shall make all DSA required corrections, shall provide all DSA required documentation, and shall coordinate and resubmit those materials to Architect for forwarding to DSA.

D. If a second round of corrections and resubmittals is required by DSA, Contractor shall be responsible for all time and coordination with DSA, without further involvement by Architect, or Contractor shall compensate Architect for their time if Contractor chooses to continue to involve Architect in the process with DSA.

E. When Contractor has obtained DSA approval of the Deferred Approval materials, Contractor shall resubmit a copy of those same DSA approved materials to Architect for Record.

F. No work shall commence on a Deferred Approval item until all these requirements have been completed.

1.5 INFORMATIONAL SUBMITTALS

A. Qualification Data: For Installer.

B. Energy Performance Certificates: For aluminum-framed entrances and storefronts, accessories, and components, from manufacturer.

1. Basis for Certification: NFRC-certified energy performance values for each aluminum-framed entrance and storefront.

C. Product Test Reports: For aluminum-framed entrances and storefronts, for tests performed by a qualified testing agency.

D. Sample Warranties: For special warranties.

1.6 CLOSEOUT SUBMITTALS

A. Maintenance Data: For aluminum-framed entrances and storefronts to include in maintenance manuals.

1.7 QUALITY ASSURANCE

A. Installer Qualifications: An installer which has had successful experience with installation of the same or similar units required for the project and other projects of similar size and scope.

B. Manufacturer Qualifications: A manufacturer capable of providing aluminum framed storefront system that meet or exceed performance requirements indicated and of documenting this performance by inclusion of test reports, and calculations.

C. Source Limitations: Obtain aluminum framed storefront system through one source from a single manufacturer.

D. Product Options: Drawings indicate size, profiles, and dimensional requirements of aluminum framed storefront system and are based on the specific system indicated. Do not modify size and dimensional requirements.

1. Do not modify intended aesthetic effects, as judged solely by Architect, except with Architect's approval. If modifications are proposed, submit comprehensive explanatory data to Architect for review.

E. Mockups: Build mockups to verify selections made under sample submittals and to demonstrate aesthetic effects and set quality standards for materials and execution.

1. Build mockup for type(s) of storefront elevation(s) as directed by Architect.

2. Notify Architect seven days in advance of dates and times when mockups will be constructed.

3. Employ supervisory personnel who will oversee mockup construction. Employ workers that will be employed during the construction at Project.

4. Demonstrate the proposed range of aesthetic effects and workmanship.

5. Obtain Architect's approval of mockups before starting work, fabrication, or construction.
   a. Allow seven days for initial review and each re-review of each mockup.

6. Maintain mockups during construction in an undisturbed condition as a standard for judging the completed Work.

F. Accessible Entrances: Comply with Accessibility requirements.

1.8 DELIVERY, STORAGE, AND HANDLING

A. Deliver aluminum entrance and storefront components in the manufacturer's original protective packaging with identification labels intact.

B. Store entrance and storefront sections out of contact with the ground and under a weather tight covering. Do not cover storefront and entrance sections with polyethylene film or similar coverings that will create a humidity chamber. If factory coated aluminum is protected with a strippable plastic film, remove the film before exposing the materials to direct sunlight.

C. Protect factory-coated surfaces during shipping and handling to prevent scratching, gouging or other damage to the finish.

1.9 FIELD MEASUREMENTS

A. Secure accurate field measurements required for the manufacture and installation of aluminum entrance and storefront work. Consult with the various trades whose work adjoins this work and be responsible for all measurements and the working out of all details.

1. Established Dimensions: Where field measurements cannot be made without delaying the Work, establish dimensions and proceed with fabricating aluminum-framed systems without field measurements. Coordinate construction to ensure that actual dimensions correspond to established dimensions.

1.10 WARRANTY

A. Provide an extended warranty under the provisions of Section 01 78 36.

B. Special Assembly Warranty: Manufacturer standard form in which manufacturer agrees to repair or replace components of aluminum-framed entrances and storefronts that do not comply with requirements or that fail in materials or workmanship within specified warranty period.

1. Failures include, but are not limited to, the following:

   a. Structural failures including, but not limited to, excessive deflection.
   b. Noise or vibration created by wind and thermal and structural movements.
   c. Deterioration of metals and other materials beyond normal weathering.
   d. Water penetration through fixed glazing and framing areas.
   e. Failure of operating components to function properly.

2. Warranty Period: Two years from date of Substantial Completion.

C. Special Finish Warranty: Standard form in which manufacturer agrees to repair finishes or replace aluminum that shows evidence of deterioration of factory-applied finishes within specified warranty period.

1. Deterioration includes, but is not limited to, the following:

2. Warranty Period: Two years from date of Substantial Completion.

PART 2 - PRODUCTS

2.1 PERFORMANCE REQUIREMENTS - STOREFRONT

A. General Performance: Comply with performance requirements specified, as determined by testing of aluminum-framed entrances and storefronts representing those indicated for this Project without failure due to defective manufacture, fabrication, installation, or other defects in construction.

1. Aluminum-framed entrances and storefronts shall withstand movements of supporting structure including, but not limited to, story drift, twist, column shortening, long-term creep, and deflection from uniformly distributed and concentrated live loads.
2. Failure also includes the following:

a. Thermal stresses transferring to building structure.
b. Glass breakage.
c. Noise or vibration created by wind and thermal and structural movements.
d. Loosening or weakening of fasteners, attachments, and other components.
e. Failure of operating units.

B. Structural Loads:

1. Wind Loads: As indicated on Structural Drawings.
2. Other Design Loads: As indicated on Structural Drawings.

C. Deflection of Framing Members:

1. Deflection Normal to Wall Plane: Limited to edge of glass in a direction perpendicular to glass plane shall not exceed L/175 of the glass edge length for each individual glazing lite or an amount that restricts edge deflection of individual glazing lites to 3/4 inch, whichever is less.

D. Structural-Test Performance: ASTM E 330 as follows:

1. When tested at positive and negative wind-load design pressures, systems do not evidence deflection exceeding specified limits.
2. When tested at 150 percent of positive and negative wind-load design pressures, systems, including anchorage, do not evidence material failures, structural distress, and permanent deformation of main framing members exceeding 0.2 percent of span.
3. Test Durations: As required by design wind velocity, but not fewer than 10 seconds.

E. Story Drift: Provide aluminum-framed systems that accommodate design displacement of adjacent stories indicated.

1. Design Displacement: As indicated on Drawings.

F. Test Performance: Meet criteria for passing, based on building occupancy type, when tested according to AAMA 501.4 at design displacement.

G. Air Infiltration: The test specimen shall be tested in accordance with ASTM E 283. Air infiltration rate shall not exceed 0.06 CFM psf at a static air pressure differential of 6.24 psf.

H. Water Resistance: The test specimen shall be tested in accordance with ASTM E 331. There shall be no leakage at a minimum static air pressure differential of 8 psf as defined in AAMA 501.

I. Condensation Resistance: Provide aluminum-framed systems with fixed glazing and framing areas having condensation-resistance factor of not less than 62 frame (Glass to Center) and 68 glass (low-e) when tested according to AAMA 1503.

J. Thermal Transmittance (U-factor): When tested to AAMA Specification 1503, the thermal transmittance (U-factor) shall not be more than:

1. Glass to Center: 0.44 (low-e). (Based upon 1" clear insulating glass (1/4" clear with e = 0.035 Low E Coating on #2 Surface, 1/2" air space with warm edge spacer and 90% argon gas fill, 1/4" clear.)

K. Thermal Transmittance (U-factor): Provide aluminum-framed systems with fixed glazing and framing areas having U-factor of 0.44 Btu / sq. ft. x h x deg F or better when tested according to AAMA 1503, based on 1" clear insulating glass (1/4" clear glass with low e coating on #2 surface + 1/2" Air Space with 90% argon gas fill + 1/4" clear glass).

2.2 PERFORMANCE REQUIREMENTS – ENTRANCE DOORS

A. Wind loads: Provide aluminum-framed entrance system; include anchorage, capable of withstanding wind load design pressures as indicated on Structural Drawings.

B. Air Infiltration: For single acting offset pivot or butt hung entrances in the closed and locked position, the test specimen shall be tested in accordance with ASTM E 283 at a pressure differential of 1.57 psf for single doors and pairs of doors. A single 3'-0" x 7'-0" entrance door and frame shall not exceed 1.0 cfm/ft^2. A pair of 6'-0" x 7'-0" entrance doors and frame shall not exceed 1.0 cfm/ft^2.

C. Structural Performance: Corner strength shall be tested per the Kawneer dual moment load test procedure and certified by an independent testing laboratory to ensure weld compliance and corner integrity. Testing procedure and certified test results available upon request.

2.3 PERFORMANCE REQUIREMENTS – PROJECT OUT VENTS

A. General Performance: Aluminum-framed window system shall withstand the effects of the following performance requirements without failure due to defective manufacture, fabrication, installation, or other defects in construction.

B. Window Performance Requirements:

1. Performance Requirements: Provide aluminum windows of performance indicated that comply with AAMA/WDMA/CSA 101/I.S.2/A440 (NAFS).
   a. Performance Class and Grade: (P-HC40 – P-HC70) Project-Out Window
2. Air Infiltration: The test specimen shall be tested in accordance with ASTM E283 at a minimum size of 60" x 36" Project-Out. Air infiltration rate shall not exceed 0.10 cfm/ft^2 at a static air pressure differential of 6.24 psf.

3. Water Resistance: The test specimen shall be tested in accordance with ASTM E547 and ASTM E331 at a minimum size of 60" x 36" Project-Out. There shall be no leakage as defined in the test method at a static air pressure differential of 15 psf.
4. Uniform Load Deflection: A minimum static air pressure difference of (40 psf (2 Locks)) or (70 psf (3 Locks)) shall be applied in the positive and negative direction in accordance with ASTM E330. There shall be no deflection in excess of L/175 of the span of any framing member.
5. Uniform Load Structural: A minimum static air pressure difference of (60 psf (2 Locks)) or (105 psf (3 Locks)) shall be applied in the positive and negative direction in accordance with ASTM E330. The unit shall be evaluated after each load with permanent set not to exceed 0.2% of span length.
6. Component Testing: Window components shall be tested in accordance with procedures described in AAMA/WDMA/CSA 101/I.S.2/A440 and AAMA 910.

NOTE; THERMAL TRANSMITTANCE AND CONDENSATION RESISTANCE TEST RESULTS NOTED ARE BASED UPON 1" CLEAR INSULATING GLASS. (1/8" + 3/4" AS +1/8")

7. Thermal Transmittance (U-Factor): When tested to AAMA Specification 1503, the thermal transmittance (U-Factor) shall not be more than;
   a. Project-Out Windows: 0.68 BTU/hr/ft^2/°F. (NFRC – 0.62).

8. Condensation Resistance Test (CRF): Provide aluminum windows tested for thermal performance according to AAMA 1503, the condensation resistance factor (CFR) shall not be less than; Frame 51, Glass 54.
9. Thermal Transmittance Test: (U-Factor): The conductive thermal transmittance (U-Factor) shall not be more than (____) BTU/hr/sf/°F per AAMA 507 or NFRC 100 when using project specified glass.
10. Temperature Index (I): Provide aluminum windows tested for thermal performance according to CSA-A440 with a Temperature Index (I) not less than: 47.7.
11. Forced Entry Resistance: All windows shall conform to ASTM F588, Grade 10.
12. Windborne-Debris-Impact-Resistance Performance: Shall be tested in accordance with ASTM E 1886 and information in ASTM E 1996 and TAS 201/203.
    a. Large - Missile Impact: For aluminum-framed systems located within 30 feet of grade.
    b. Small - Missile Impact: For aluminum-framed systems located within 30 feet above grade.

2.4 MANUFACTURERS

A. Manufacturers: Subject to compliance with requirements, provide products by one of the following:

Kawneer Company Inc.; www.kawneer.com; Series: Tri-Fab VG 451T.
Arcadia, Inc.; www.arcadiainc.com; Series: AG451T.
U.S. Aluminum Corp.; www.usalum.com; Series: 451.
Old Castle Building Envelope; www.oldcastlebe.com; Series: 3000 Thermal MultiPlane.
Substitutions: Section 01 25 13 – Product Options and Substitutions.

B. Basis-of-Design Product:

1. Kawneer Company Inc.
2. Series: Trifab™ VG 451T (Thermal) Storefront System.
3. System Dimensions: Nominal 2” x 4-1/2”.
4. Glass: Center.
5. Framing Fabrication: (TBD: Screw Spline; Shear Block; or Stick Fabrication).

6. Windload Chart Performance: Based on composite properties of Kawneer profiles 451T-CG-540 and 451T-CG-010, which are calculated in accordance with AAMA TIR-A8 and AAMA 505.

2.5 MATERIALS

A. Aluminum:

1. Extruded Aluminum: 6063-T6 alloy or other alloy standard with the manufacturer having equivalent structural and corrosion resistance properties and as recommended by the manufacturer for required finish meeting the requirements of ASTM B221; not less than 0.070-inch wall thickness at any location for the main frame.
2. Sheet Aluminum: 5055 aluminum alloy meeting the requirements of ASTM B209.
3. Provide exposed materials free from defects and other surface blemishes.

B. Reinforcing Members: Aluminum, nonmagnetic stainless steel, or nickel/chrome-plated steel complying with ASTM B 456 for Type SC 3 severe service conditions, or zinc-coated steel or iron complying with ASTM B 633 for SC 3 severe service conditions or other suitable zinc coating; provide sufficient strength to withstand design pressure indicated.

C. Fasteners: Provide nuts, screws, washers, bolts, clips, miscellaneous fastening devices, and internal components of aluminum, nonmagnetic stainless steel, or other non-corrosive materials compatible with the aluminum.

D. Anchors, Clips, and Accessories: Aluminum, nonmagnetic stainless steel, or zinc-coated steel or iron complying with ASTM B 633 for SC 3 severe service conditions or other suitable zinc coating; provide sufficient strength to withstand design pressure indicated.

E. Glass and Glazing Materials: Comply with the requirements of Section 08 80 00.

1. Glazing Gaskets: Manufacturer's standard compression types; replaceable, extruded EPDM rubber.
2. Spacers and Setting Blocks: Manufacturer's standard elastomeric type.
3. Bond-Breaker Tape: Manufacturer's standard TFE-fluorocarbon or polyethylene material to which sealants will not develop adhesion.

F. Concealed Flashing: 0.0179-inch (26-gage) minimum dead-soft stainless steel, or 0.040-inch minimum aluminum sheet of alloy and type selected by manufacturer for compatibility with other components.

G. Weatherstripping:

1. Compression Weatherstripping: Manufacturer's standard replaceable compressible weatherstripping gaskets of molded neoprene (ASTM D2000) or molded PVC (ASTM D2287).
2. Sliding Weatherstripping: Manufacturer's standard replaceable wool, polypropylene, or nylon woven pile complying with AAMA 701.2.

H. Bituminous Coatings: Cold applied asphalt-mastic paint complying with SSPC-Paint 12 requirements, except containing no asbestos; formulated for 30-mil thickness per coat.

I. Glass: Center. Provide horizontal and vertical members with a nominal face dimension of 2 inches and overall depth of 4-1/2 inches. The major portions of each extrusion shall be not less than 0.093-inch thick unless otherwise indicated or specified. Glass stops shall be not less than 0.050-inch thick.

J. Glazing: Provide glass framing members designed for flush glazing on all sides with through sight lines and no projecting stops or face joints. Provide fully resilient setting of glass by use of vinyl, neoprene, or EPDM gaskets on both sides of the glass. Secure snap-in type stops at exterior side of aluminum framing to prevent removal.

K. Steel Reinforcing: Provide vertical and horizontal steel reinforcing sized as required for members and based on structural calculations and design analyses for imposed dead loads and wind load.

L. Door Stops: Door frames for doors hung on hinges or offset pivots shall have snap-in type door stops with pile weatherstripping at head and jambs.

M. Sealant: As specified in Section 07 92 00. For sealants required within fabricated storefront system, provide permanently elastic, non-shrinking, and non-migrating type recommended by sealant manufacturer for joint size and movement.

N. Tolerances: References to tolerances for wall thickness and other cross-sectional dimensions of storefront members are nominal and in compliance with AA Aluminum Standards and Data.

2.6 STOREFRONT FRAMING SYSTEM

A. Thermal Barrier (Trifab® VG 451T):

1. Kawneer IsoLock® Thermal Break with 1/4" separation consisting of a two-part chemically curing, high-density polyurethane, which is mechanically and adhesively joined to aluminum storefront sections.
   a. Thermal Break shall be designed in accordance with AAMA TIR-A8 and testing in accordance with AAMA 505.

B. Brackets and Reinforcements: Manufacturer’s standard high-strength aluminum with nonstaining, nonferrous shims for aligning system components.

C. Fasteners and Accessories: Manufacturer’s standard corrosion-resistant, nonstaining, nonbleeding fasteners and accessories compatible with adjacent materials. Where exposed, shall be stainless steel.

D. Perimeter Anchors: When steel anchors are used, provide insulation between steel material and aluminum material to prevent galvanic action.

2.7 ENTRANCE DOOR SYSTEMS

A. Manufacturers: Acceptable products or equal:

1. Basis-of-Design Product: Kawneer Co., Inc.; TuffLine™ Series 500
   Arcadia Inc.
   U.S. Aluminum Corp.
   Oldcastle Building Envelope™

B. Design: Manufacturer's standard heavy-duty wide stile doors where scheduled, except provide width dimensions for rails and stiles as noted. The major portions of each extrusion shall be not less than 0.188-inch thick unless otherwise indicated or specified. Glass stops shall be not less than 0.050-inch thick.

1. Bottom Rail: 10”.
2. Top Rail: 6”.
3. Middle Rail: 6”.

4. Vertical Stiles: 6”.
5. Depth: 1-3/4”.

C. Construction: Corner construction shall consist of both heavy reinforcement blocks or brackets secured with bolts or screws and SIGMA deep penetration welds. Furnish each door leaf with an adjustable mechanism allowing for minor field adjustments both vertically and front to back.

D. Glazing Stops: Provide snap-in type interior stops and lock in tamper proof type exterior stops with no exposed screws required to secure stops. Provide stops with vinyl, neoprene or EPDM bulb type glazing gaskets.

E. Weatherstripping: Provide pile weatherstripping on both stiles of center pivoted doors and on meeting stiles of offset pivoted doors.

2.8 ENTRANCE DOOR HARDWARE

A. Finish hardware is specified in Section 08 71 00. Coordinate with hardware supplier to obtain factory installed hardware and templates for field-installed hardware. Provide stainless or galvanized steel reinforcing for hardware items to be secured to aluminum framing in the field.

2.9 PROJECT-OUT WINDOWS

A. Basis-of-Design Product: Kawneer GLASSvent™ Windows.

1. 2-13/16” system depth (with 1” infill glazing).
2. Performance Grade: P-HC40 with 1” Glass and 2 Cam Locks.

B. Materials:

1. Aluminum Extrusions: Alloy and temper recommended by aluminum window manufacturer for strength, corrosion resistance, and application of required finish and not less than 0.090" wall thickness at any location for the main frame and sash members.
2. Thermal Barrier: The thermal barrier shall be Kawneer consisting of low conductive polymer full depth of infill.
3. Fasteners: Nonmagnetic stainless steel or other materials to be non-corrosive and compatible with aluminum window members, trim, hardware, anchors, and other components.
4. Anchors: Nonmagnetic stainless steel, or zinc-coated steel or iron complying with ASTM B 633 for SC 3 severe service conditions; provide sufficient strength to withstand design pressure indicated.
5. Sealant: For sealants required within fabricated windows, provide window manufacturer's standard, permanently elastic, non-shrinking, and non-migrating type recommended by sealant manufacturer for joint size and movement.

C. Hardware:

1. Stainless Steel 4-Bar Hinges.
2. Cast White Bronze Cam Locking Handles.
3. Cast White Bronze Cam Handle with Pole Ring (where designated).

D. Fabrication:

1. Window Vent and/or Vent Frame Joinery: Mitered and Mechanically clipped and/or staked. Factory sealed vent and /or vent frame and corner joints.

2. Fabricate aluminum windows in sizes indicated. Include a complete system for assembling components and anchoring windows.

2.10 FABRICATION

A. Framing Members, General: Fabricate components that, when assembled, have the following characteristics:

1. Profiles that are sharp, straight, and free of defects or deformations.
2. Accurately fit joints; make joints flush, hairline and weatherproof.
3. Means to drain water passing joints, condensation within framing members, and moisture migrating within the system to exterior.
4. Physical and thermal isolation of glazing from framing members.
5. Accommodations for thermal and mechanical movements of glazing and framing to maintain required glazing edge clearances.
6. Provisions for field replacement of glazing.
7. Fasteners, anchors, and connection devices that are concealed from view to greatest extent possible.

B. Mechanically Glazed Framing Members: Fabricate for flush glazing without projecting stops.

C. Storefront Framing: Fabricate components for assembly using manufacturer's standard installation instructions.

D. After fabrication, clearly mark components to identify their locations in Project according to Shop Drawings.

2.11 ALUMINUM FINISH

A. Finish designations prefixed by AA comply with the system established by the Aluminum Association for designating aluminum finishes.

B. Factory Finishing:

1. Kawneer Permanodic™ AA-M10C21A41 / AA-M45C22A41, AAMA 611, Architectural Class I Clear Anodic Coating (Color #14 Clear).

PART 3 - EXECUTION

3.1 EXAMINATION

A. Examine substrates and supports for compliance with installation tolerances and other conditions that affect installation of aluminum entrances and storefronts. Correct unsatisfactory conditions before proceeding with the installation.

1. Concrete and Masonry Surfaces: Visibly dry and free of excess mortar, sand, and other construction debris.
2. Metal Surfaces: Dry; clean; free of grease, oil, dirt, rust, corrosion, and welding slag; without sharp edges or offsets at joints.
3. Proceed with installation only after unsatisfactory conditions have been corrected.

3.2 INSTALLATION

A. General:

1. Comply with manufacturer's written instructions.
2. Do not install damaged components.
3. Fit joints to produce hairline joints free of burrs and distortion.
4. Rigidly secure non-movement joints.
5. Install anchors with separators and isolators to prevent metal corrosion and electrolytic deterioration and to prevent impeding movement of moving joints.
6. Seal perimeter and other joints watertight unless otherwise indicated.

B. Metal Protection:

1. Where aluminum is in contact with dissimilar metals, protect against galvanic action by painting contact surfaces with materials recommended by manufacturer for this purpose or by installing nonconductive spacers.
2. Where aluminum is in contact with concrete or masonry, protect against corrosion by painting contact surfaces with bituminous paint.

C. Set continuous sill members and flashing in full sealant bed as specified in Section 07 92 00 "Joint Sealants" to produce weathertight installation.

D. Install components plumb and true in alignment with established lines and grades.

E. Install operable units level and plumb, securely anchored, and without distortion. Adjust weather-stripping contact and hardware movement to produce proper operation.

F. Install glazing as specified in Section 08 80 00 "Glazing."

G. Install weatherseal sealant according to Section 07 92 00 "Joint Sealants" and according to sealant manufacturer's written instructions to produce weatherproof joints. Install joint filler behind sealant as recommended by sealant manufacturer.

H. Entrance Doors: Install doors to produce smooth operation and tight fit at contact points.

1. Exterior Doors: Install to produce weathertight enclosure and tight fit at weather stripping.
2. Field-Installed Entrance Door Hardware: Install surface-mounted entrance door hardware according to entrance door hardware manufacturers' written instructions using concealed fasteners to greatest extent possible

3.3 ERECTION TOLERANCES

A. Erection Tolerances: Install aluminum-framed entrances and storefronts to comply with the following maximum tolerances:

1. Plumb: 1/8 inch in 10 feet.
2. Level: 1/8 inch in 20 feet.
3. Alignment:
   a. Where surfaces abut in line or are separated by reveal or protruding element up to 1/2 inch wide, limit offset from true alignment to 1/16 inch.
   b. Where surfaces are separated by reveal or protruding element from 1/2 to 1 inch wide, limit offset from true alignment to 1/8 inch.
   c. Where surfaces are separated by reveal or protruding element of 1 inch wide or more, limit offset from true alignment to 1/4 inch.
4. Location: Limit variation from plane to 1/8 inch in 12 feet; 1/2 inch over total length.

3.4 FIELD QUALITY CONTROL

A. Testing Agency: Owner will engage a qualified testing agency to perform tests and inspections.

B. Field Tests: Architect shall select storefront units to be tested as soon as a representative portion of the project has been installed, glazed, perimeter caulked and cured. Conduct tests for air infiltration and water penetration with manufacturer's representative present. Tests not meeting specified performance requirements and units having deficiencies shall be corrected as part of the contract amount.

1. Testing: Testing shall be performed by a qualified independent testing agency. Testing Standard per AAMA 503, including reference to ASTM E 783 for Air Infiltration Test and ASTM E 1105 Water Infiltration Test.

   a. Air Infiltration Tests: Conduct tests in accordance with ASTM E 783. Allowable air infiltration shall not exceed 1.5 times the amount indicated in the performance requirements or 0.09 cfm/ft^2, whichever is greater.
   b. Water Infiltration Tests: Conduct tests in accordance with ASTM E 1105. No uncontrolled water leakage is permitted when tested at a static test pressure of two-thirds the specified water penetration pressure but not less than 6.24 psf.

C. Aluminum-framed entrances and storefronts will be considered defective if they do not pass tests and inspections.

D. Manufacturer's Field Services: Upon Architect’s or Owner’s written request, provide periodic site visit by manufacturer’s field service representative.

3.5 CLEANING

A. Clean aluminum work before acceptance, removing blemishes, finger marks, oxidation, and leave in first-class condition. Use cleaning compounds approved by the aluminum framing manufacturer.

B. Clean glass immediately after installation. Comply with glass manufacturer's written recommendations for final cleaning and maintenance. Remove nonpermanent labels, and clean surfaces.

C. Remove and replace glass that has been broken, chipped, cracked, abraded, or damaged during construction period.

3.6 ADJUSTING

A. Entrances: Adjust operating hardware for smooth operation according to hardware manufacturers' written instructions.

1. For doors accessible to people with disabilities, adjust closers to provide a 3-second closer sweep period for doors to move from a 70-degree open position to 3 inches from the latch measured to the leading door edge.

3.7 PROTECTION

A. After installation, protect exposed portions of the aluminum entrance work from damage by grinding and polishing compounds, plaster, lime, acids, cement or other contaminants.

END OF SECTION

SECTION 09 72 00 ADDENDUM 1

WALL COVERINGS

PART 1 - GENERAL

1.1 SUMMARY

A. Section Includes:

1. Vinyl wall covering.

B. Related Documents: The Conditions of the Contract and Division 1 apply to this section as fully as if repeated herein.

1.2 ACTION SUBMITTALS

A. Product Data: For each type of product.

1. Include data on physical characteristics, durability, fade resistance, and fire-test-response characteristics.

B. Shop Drawings: Show location and extent of each wall-covering type. Indicate seams and termination points.

C. Samples: For each type of wall covering and for each color, pattern, texture, and finish specified, minimum 18” x 18” in size.

1. Wall-Covering Sample: From same production run to be used for the Work, with specified treatments.

1.3 INFORMATIONAL SUBMITTALS

A. Qualification Data: For testing agency.

B. Product Test Reports: For each wall covering, for tests performed by a qualified testing agency.

C. Certificate of Compliance: Submit manufacturer’s certification that wallcovering furnished meets or exceeds the specified requirements.

1. The manufacturer shall certify at the time of shipment that the materials furnished meet the published flame spread and smoke development Fire Hazard Classification Rating(s) of those products when tested according to ASTM-E84 Tunnel Test.

1.4 CLOSEOUT SUBMITTALS

A. Maintenance Data: For wall coverings to include in maintenance manuals.

1.5 MAINTENANCE MATERIAL SUBMITTALS

A. Furnish extra materials, from the same product run, that match products installed and that

are packaged with protective covering for storage and identified with labels describing contents.

1. Wall-Covering Materials: For each type, color, texture, and finish, full width by length to equal to 5 percent of amount installed.

1.6 QUALITY ASSURANCE

A. Mockups: Build mockups to verify selections made under Sample submittals and to demonstrate aesthetic effects and to set quality standards for installation.

1. Build mockups for each type of wall covering on typical substrate. Comply with requirements in ASTM F 1141 for appearance shading characteristics.
2. Approval of mockups does not constitute approval of deviations from the Contract Documents contained in mockups unless Architect specifically approves such deviations in writing.
3. Subject to compliance with requirements, approved mockups may become part of the completed Work if undisturbed at time of Substantial Completion.

1.7 DELIVERY STORAGE AND HANDLING

A. Deliver vinyl wallcovering and adhesive to the job site in unbroken or undamaged containers and clearly marked with the supplier's identification label.

B. Store vinyl wallcoverings in a flat position to avoid damage to roll ends. Store materials in a clean, dry storage area with temperature maintained above 55 deg F with normal humidity. Do not cross stack this material.

1.8 FIELD CONDITIONS

A. Environmental Limitations: Do not deliver or install wall coverings until spaces are enclosed and weathertight, wet work in spaces is complete and dry, work above ceilings is complete, and temporary HVAC system is operating and maintaining ambient temperature and humidity conditions at levels intended for occupants after Project completion during the remainder of the construction period.

B. Lighting: Do not install wall covering until lighting that matches conditions intended for occupants after Project completion is provided on the surfaces to receive wall covering.

C. Ventilation: Provide continuous ventilation during installation and for not less than the time recommended by wall-covering manufacturer for full drying or curing.

1.9 WARRANTY

A. Furnish a written warranty against defects in material or workmanship for five (5) years from the date of Substantial Completion.

PART 2 - PRODUCTS

2.1 PERFORMANCE REQUIREMENTS

A. Fire-Test-Response Characteristics: As determined by testing identical wall coverings applied with identical adhesives to substrates according to test method indicated below by a qualified testing agency. Identify products with appropriate markings of applicable testing agency.

1. Surface-Burning Characteristics: Comply with ASTM E 84; testing by a qualified testing agency. Identify products with appropriate markings of applicable testing agency.

a. Flame-Spread Index: 25 or less.
b. Smoke-Developed Index: 450 or less.

2. Fire-Growth Contribution: No flashover and heat and smoke release according to NFPA 265.

B. UL Label: All products shall be UL labeled assuring complete compliance with all specifications and requirements through continuous inspection by UL inspectors.

C. Fire Detection Characteristics: Vinyl wallcovering shall contain the Early Warning Effect® formulation which provides early warning to potential fire conditions. Vinyl wallcovering shall contain thermoparticulating ingredients which, when heated to approximately 300 deg F, emit a colorless, odorless vapor that activates ionization smoke detectors when installed according to manufacturer's specifications. Evidence of the Early Warning Effect® shall be based on the ASTM E603 standard guide for room fire experiments.

2.2 VINYL WALL COVERING

A. Basis-of-Design Product: Subject to compliance with requirements, provide wallcovering from Koroseal School Collection; or comparable Koroseal collection; www.koroseal.com

B. Description: Provide mildew-resistant products in rolls from same production run and complying with the following:

1. FS CCC-W-408D and CFFA-W-101-D for Type II, Medium-Duty products.

C. Total Weight: 21 oz/linear yard, excluding coatings.

D. Width: 52 - 54 inches.

E. Backing: Osnaburg fabric.

F. Repeat: None.

G. Stain-Resistant Coating: Koroclear. The vinyl wallcovering shall have a 0.37-inch thick protective coating factory-applied to its surface to minimize migration of stains into the vinyl and, therefore, offer stain protection from a variety of staining agents and provide greater ease of cleanability.

H. Colors, Textures, and Patterns: As selected by Architect from manufacturer's full range.

2.3 ACCESSORIES

A. Adhesive: Mildew-resistant, nonstaining, strippable adhesive, for use with specific wall covering and substrate application indicated and as recommended in writing by wall-covering manufacturer.

B. Primer/Sealer: Mildew resistant, and recommended in writing by primer/sealer and wall-covering manufacturers for intended substrate.

PART 3 - EXECUTION

3.1 EXAMINATION

A. Examine substrates and conditions, with Installer present, for compliance with requirements for levelness, wall plumbness, maximum moisture content, and other conditions affecting performance of the Work.

B. Proceed with installation only after unsatisfactory conditions have been corrected.

C. Check substrate with a suitable “Moisture Meter”. Moisture shall not exceed 4%.

3.2 PREPARATION

A. Comply with manufacturer's written instructions for surface preparation.

B. Clean substrates of substances that could impair bond of wall covering, including dirt, oil, grease, mold, mildew, and incompatible primers.

C. Prepare substrates to achieve a smooth, dry, clean, structurally sound surface free of flaking, unsound coatings, cracks, and defects.

1. Gypsum Board: Prime with primer as recommended in writing by primer/sealer manufacturer and wall-covering manufacturer.
2. Painted Surfaces: Treat areas susceptible to pigment bleeding.

D. Check painted surfaces for pigment bleeding. Sand gloss, semigloss, and eggshell finish with fine sandpaper. If there is any possibility of pigment bleed-through, a coat of sealer, recommended by the manufacturer, should be applied before application of the wallcovering.

E. If there is any evidence of mildew, it must be removed and the wall surface treated to inhibit further mildew growth.

F. Remove hardware and hardware accessories, electrical plates and covers, light fixture trims, and similar items.

G. Acclimatize wall-covering materials by removing them from packaging in the installation areas not less than 24 hours before installation.

3.3 WALL-COVERING INSTALLATION

A. Install wallcovering in strict accordance with the manufacturer’s printed instructions using vinyl wallcovering adhesive recommended by the manufacturer (WHEAT PASTE SHALL NOT BE USED). It is absolutely imperative that installer read the manufacturer’s instruction sheet in each roll before installing the vinyl wallcovering. Permanent building light shall be available for installation.

C. Before cutting, examine pattern and color and determine that they are the correct pattern and color as specified.

D. Install each roll in sequence starting with largest roll number and each strip in same sequence as cut from roll. If pattern is not random, examine for repeat design. Some patterns should be lined up, matched or reversed for best results. If necessary, trim selvage deep enough to assure color uniformity.

E. After application of three strips, make an inspection and if there are any variations in color or pattern which are felt to be excessive, notify the wallcovering distributor or manufacturer's representative for his inspection before any further wallcovering is installed.

F. Always bring material six (6) inches around inside and outside corners being sure to fit into corners to avoid bridging or spanning.

G. Smooth the wallcovering to the hanging surface with a stiff bristled sweep brush or a flexible broad-knife to eliminate air bubbles.

H. Remove excess adhesive along finished seam immediately after each wallcovering strip is applied. Use of clean, warm water, a natural sponge, and clean towels are recommended for this use. It is very important to change water often to maintain cleanliness.

3.4 CLEANING

A. Remove excess adhesive at seams, perimeter edges, and adjacent surfaces.

B. Use cleaning methods recommended in writing by wall-covering manufacturer.

C. Replace strips that cannot be cleaned.

D. Reinstall hardware and hardware accessories, electrical plates and covers, light fixture trims, and similar items.

END OF SECTION

11/21/18

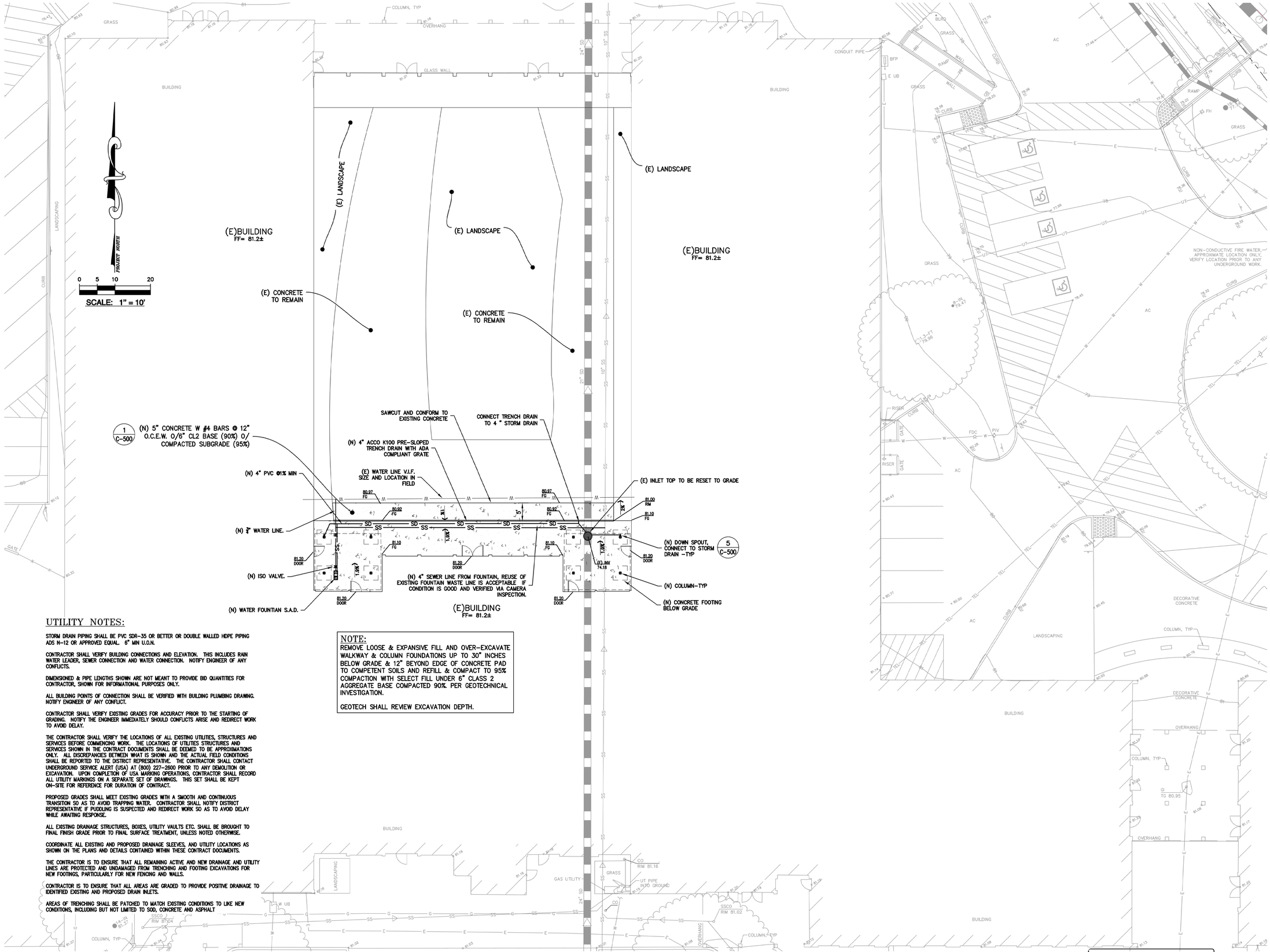

UTILITY NOTES:

STORM DRAIN PIPING SHALL BE PVC SDR-35 OR BETTER OR DOUBLE WALLED HDPE PIPING ADS N-12 OR APPROVED EQUAL. 6" MIN U.O.N.

CONTRACTOR SHALL VERIFY BUILDING CONNECTIONS AND ELEVATION. THIS INCLUDES RAIN WATER LEADER, SEWER CONNECTION AND WATER CONNECTION. NOTIFY ENGINEER OF ANY CONFLICTS.

DIMENSIONED & PIPE LENGTHS SHOWN ARE NOT MEANT TO PROVIDE BID QUANTITIES FOR CONTRACTOR, SHOWN FOR INFORMATIONAL PURPOSES ONLY.

ALL BUILDING POINTS OF CONNECTION SHALL BE VERIFIED WITH BUILDING PLUMBING DRAWING. NOTIFY ENGINEER OF ANY CONFLICT.

CONTRACTOR SHALL VERIFY EXISTING GRADES FOR ACCURACY PRIOR TO THE STARTING OF GRADING. NOTIFY THE ENGINEER IMMEDIATELY SHOULD CONFLICTS ARISE AND REDIRECT WORK TO AVOID DELAY.

THE CONTRACTOR SHALL VERIFY THE LOCATIONS OF ALL EXISTING UTILITIES, STRUCTURES AND SERVICES BEFORE COMMENCING WORK. THE LOCATIONS OF UTILITIES STRUCTURES AND SERVICES SHOWN IN THE CONTRACT DOCUMENTS SHALL BE DEEMED TO BE APPROXIMATIONS ONLY. ALL DISCREPANCIES BETWEEN WHAT IS SHOWN AND THE ACTUAL FIELD CONDITIONS SHALL BE REPORTED TO THE DISTRICT REPRESENTATIVE. THE CONTRACTOR SHALL CONTACT UNDERGROUND SERVICE ALERT (USA) AT (800) 227-2600 PRIOR TO ANY DEMOLITION OR EXCAVATION. UPON COMPLETION OF USA MARKING OPERATIONS, CONTRACTOR SHALL RECORD ALL UTILITY MARKINGS ON A SEPARATE SET OF DRAWINGS. THIS SET SHALL BE KEPT ON-SITE FOR REFERENCE FOR DURATION OF CONTRACT.

PROPOSED GRADES SHALL MEET EXISTING GRADES WITH A SMOOTH AND CONTINUOUS TRANSITION SO AS TO AVOID TRAPPING WATER. CONTRACTOR SHALL NOTIFY DISTRICT REPRESENTATIVE IF PUDDLING IS SUSPECTED AND REDIRECT WORK SO AS TO AVOID DELAY WHILE AWAITING RESPONSE.

ALL EXISTING DRAINAGE STRUCTURES, BOXES, UTILITY VAULTS ETC. SHALL BE BROUGHT TO FINAL FINISH GRADE PRIOR TO FINAL SURFACE TREATMENT, UNLESS NOTED OTHERWISE.

COORDINATE ALL EXISTING AND PROPOSED DRAINAGE SLEEVES, AND UTILITY LOCATIONS AS SHOWN ON THE PLANS AND DETAILS CONTAINED WITHIN THESE CONTRACT DOCUMENTS.

THE CONTRACTOR IS TO ENSURE THAT ALL REMAINING ACTIVE AND NEW DRAINAGE AND UTILITY LINES ARE PROTECTED AND UNDAMAGED FROM TRENCHING AND FOOTING EXCAVATIONS FOR NEW FOOTINGS, PARTICULARLY FOR NEW FENCING AND WALLS.

CONTRACTOR IS TO ENSURE THAT ALL AREAS ARE GRADED TO PROVIDE POSITIVE DRAINAGE TO IDENTIFIED EXISTING AND PROPOSED DRAIN INLETS.

AREAS OF TRENCHING SHALL BE PATCHED TO MATCH EXISTING CONDITIONS TO LIKE NEW CONDITIONS, INCLUDING BUT NOT LIMITED TO SOD, CONCRETE AND ASPHALT

NOTE:

REMOVE LOOSE & EXPANSIVE FILL AND OVER-EXCAVATE WALKWAY & COLUMN FOUNDATIONS UP TO 30" INCHES BELOW GRADE & 12" BEYOND EDGE OF CONCRETE PAD TO COMPETENT SOILS AND REFILL & COMPACT TO 95% COMPACTION WITH SELECT FILL UNDER 6" CLASS 2 AGGREGATE BASE COMPACTED 90% PER GEOTECHNICAL INVESTIGATION.

GEOTECH SHALL REVIEW EXCAVATION DEPTH.

NOTE:
PRIOR TO BEGINNING WORK AND AFTER INITIAL HORIZONTAL CONTROL STAKING, CONTRACTOR SHALL FIELD CHECK ALL ELEVATIONS MARKED WITH (E) AND REPORT ANY DISCREPANCIES TO THE CIVIL ENGINEER AND ARCHITECT.

SAN RAFAEL CITY SCHOOLS
310 NOVA ALBION WAY
SAN RAFAEL, CA 94903

TERRA LINDA HS INNOVATION HUB

320 Nova Albion Way
San Rafael, CA
94903 (415) 492-3105

Date	Issued For
11/15/18	DSA SUBMITTAL

CIVIL ENGINEER
CLARK CIVIL ENGINEERING
12700 HIGHWAY ONE,
POINT REYES STATION, CA 94956
TEL. (415) 295-4450
FAX (510) 372-0259
CCE PROJECT NO. 217039

HED
417 Montgomery Street
Suite 400
San Francisco, CA
94104 USA

(415) 981-2345

WWW.HED.DESIGN

2017-03489-000

GRADING AND DRAINAGE PLAN

C-101
ADDENDUM 1

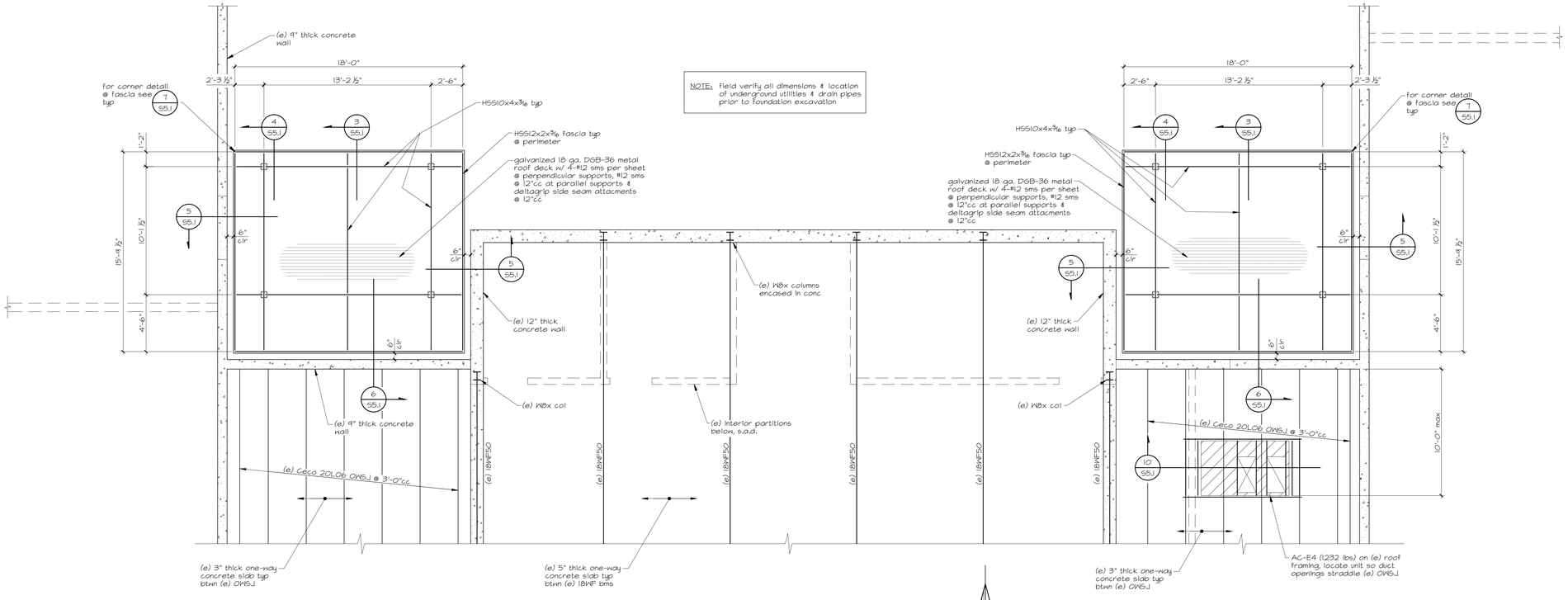

B CANOPY ROOF FRAMING PLAN

¼"=1'-0"

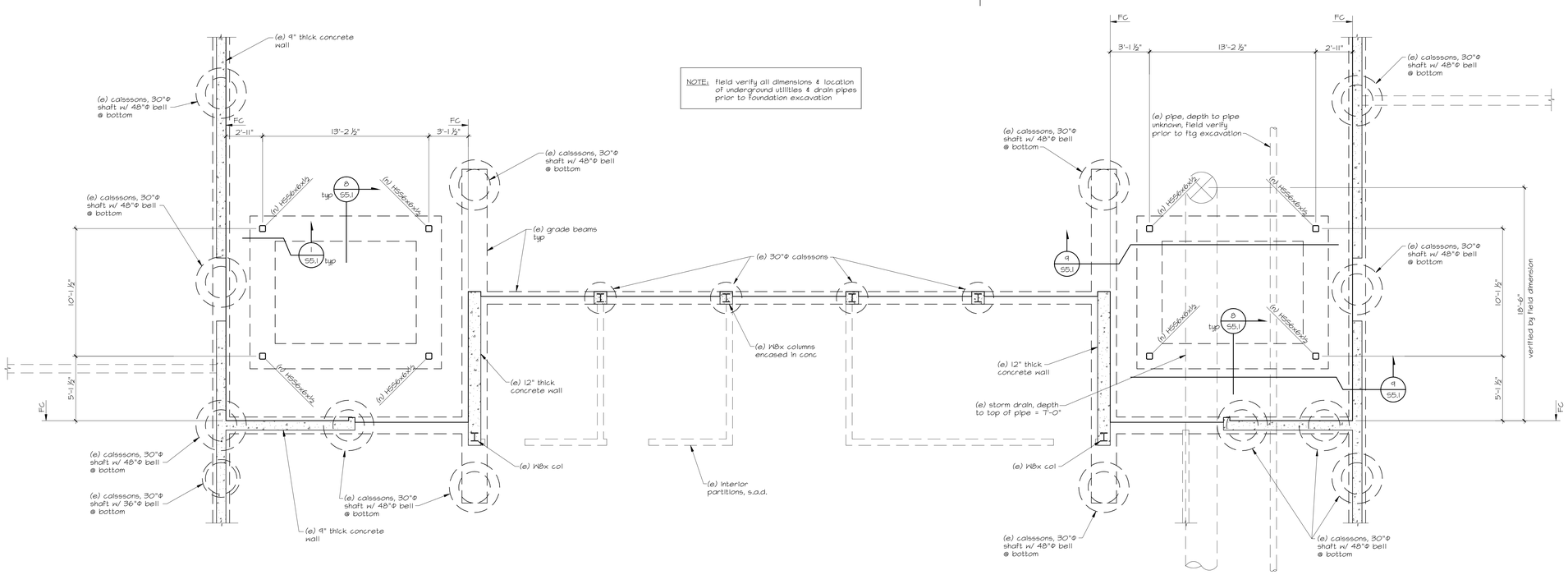

A PARTIAL FOUNDATION PLAN

¼"=1'-0"

SAN RAFAEL CITY SCHOOLS
310 NOVA ALBION WAY
SAN RAFAEL, CA 94903

Terra Linda HS Innovation Hub

320 Nova Albion Way
San Rafael, CA
94903 (415) 492-3105

Date	Issued For
10/19/18	DSA APPROVAL

FILE#: 21-H1 PTN#: 65466-28

IDENTICATION STAMP
DIV. OF THE STATE ARCHITECT
APP#: 01-117586
AC FLS SS
DATE

HED
417 Montgomery Street
Suite 400
San Francisco, CA
94104 USA
(415) 981-2345
WWW.HED.DESIGN

REGISTERED PROFESSIONAL ENGINEER
TIMOTHY L. JREI
No.4310
Exp.12/31/19
STRUCTURAL
STATE OF CALIFORNIA

2017-03489-000

FOUNDATION PLAN & ROOF FRAMING PLAN

ADDENDUM 1

S2.1

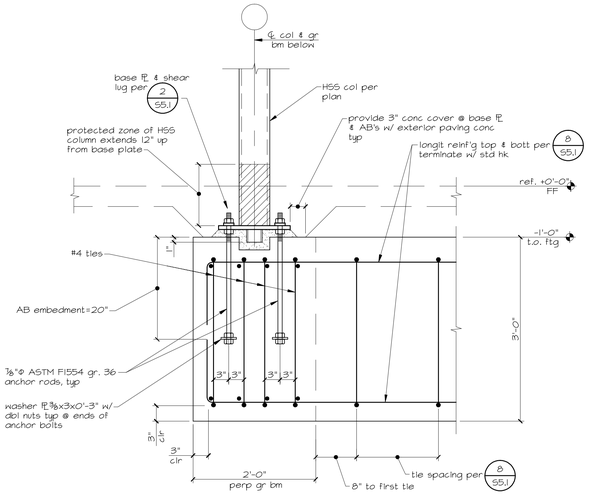

1 COLUMN ANCHORAGE
1"=1'-0"

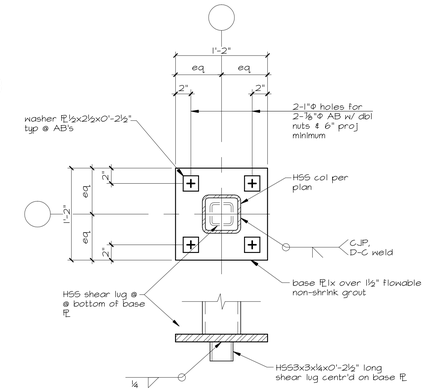

NOTE: minimum fillet weld size = 5/16" for any back-up bars required at CJP, D-G weld from HSS column to base PL

2 DETAIL
1 1/2"=1'-0"

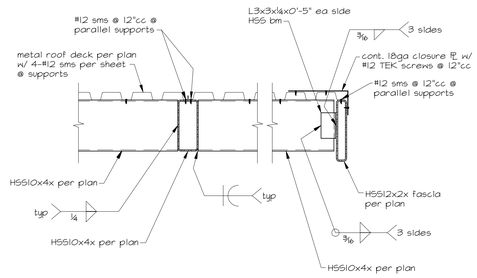

3 OVERHANG/FASCIA DETAIL
1"=1'-0"

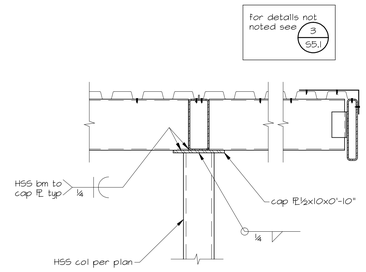

NOTE: At weld from HSS beams to cap PL, make weld between continuous cantilevered HSS beam first. Then make other welds.

4 HSS COLUMN/BEAM CONN
1"=1'-0"

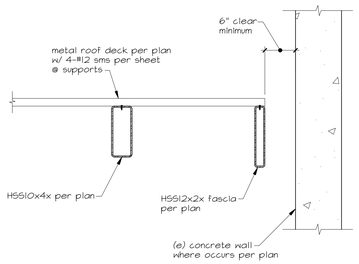

5 OVERHANG/FASCIA DETAIL
1"=1'-0"

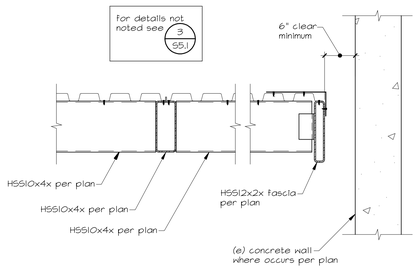

6 OVERHANG/FASCIA DETAIL
1"=1'-0"

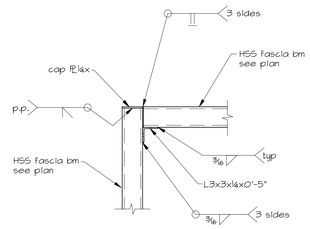

PLAN VIEW

7 DETAIL
1"=1'-0"

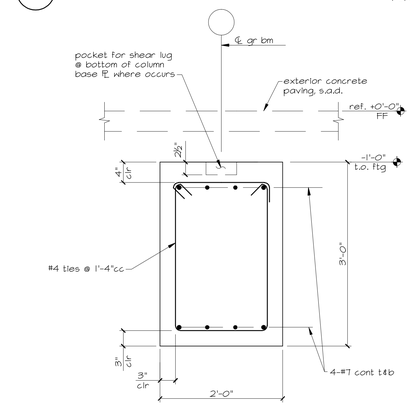

8 TYP GRADE BEAM
1"=1'-0"

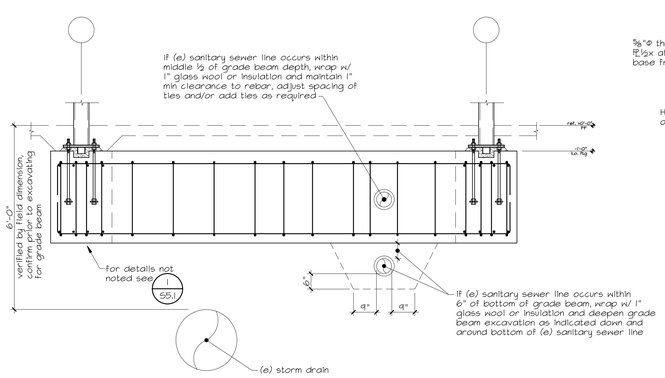

9 DETAIL
1/2"=1'-0"

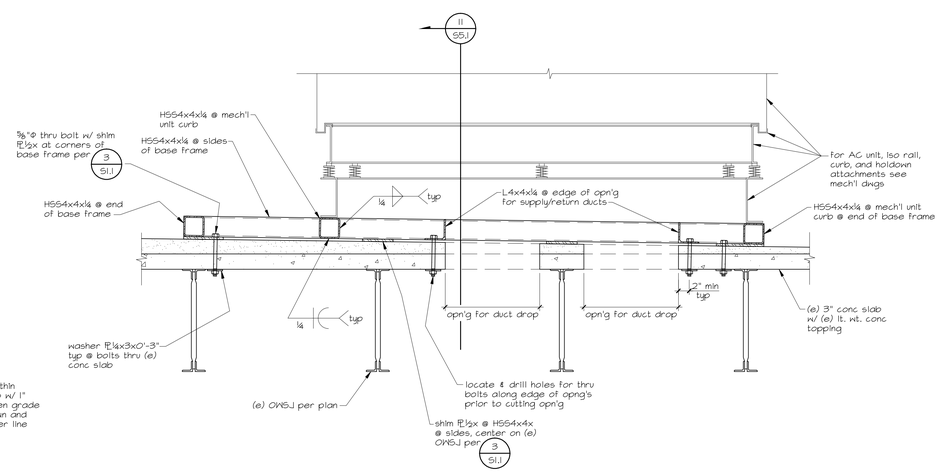

10 MECHANICAL UNIT BASE FRAME
551-10
1"=1'-0"

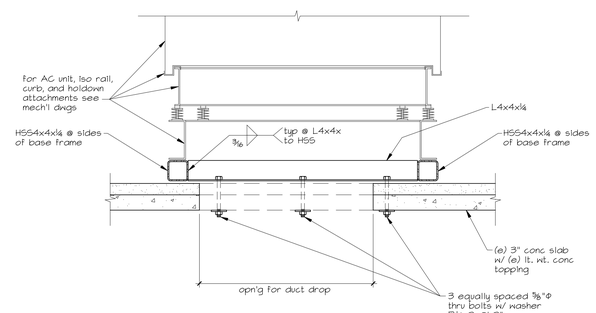

11 MECHANICAL UNIT BASE FRAME
551-11
1"=1'-0"

SAN RAFAEL CITY SCHOOLS
310 NOVA ALBION WAY
SAN RAFAEL, CA 94903

Terra Linda HS
Innovation Hub

320 Nova Albion Way
San Rafael, CA
94903 (415) 492-3105

Date	Issued For
10/19/18	DSA APPROVAL

FILE#: 21-H1 PTN#: 65466-28

IDENTICATION STAMP
DIV. OF THE STATE ARCHITECT
APP#: 01-117586
AC FLS SS
DATE

HED
417 Montgomery Street
Suite 400
San Francisco, CA
94104 USA
(415) 981-2345
WWW.HED.DESIGN

REGISTERED PROFESSIONAL ENGINEER
TIMOTHY L. JIRE
No.4310
Exp.12/31/19
STRUCTURAL
STATE OF CALIFORNIA

2017-03489-000

DETAILS

ADDENDUM 1

S5.1

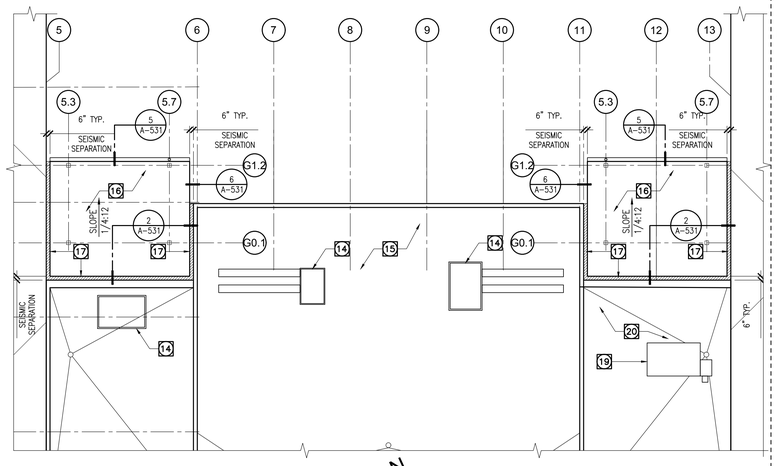

2 CANOPY ROOF PLAN
1/8" = 1'-0"

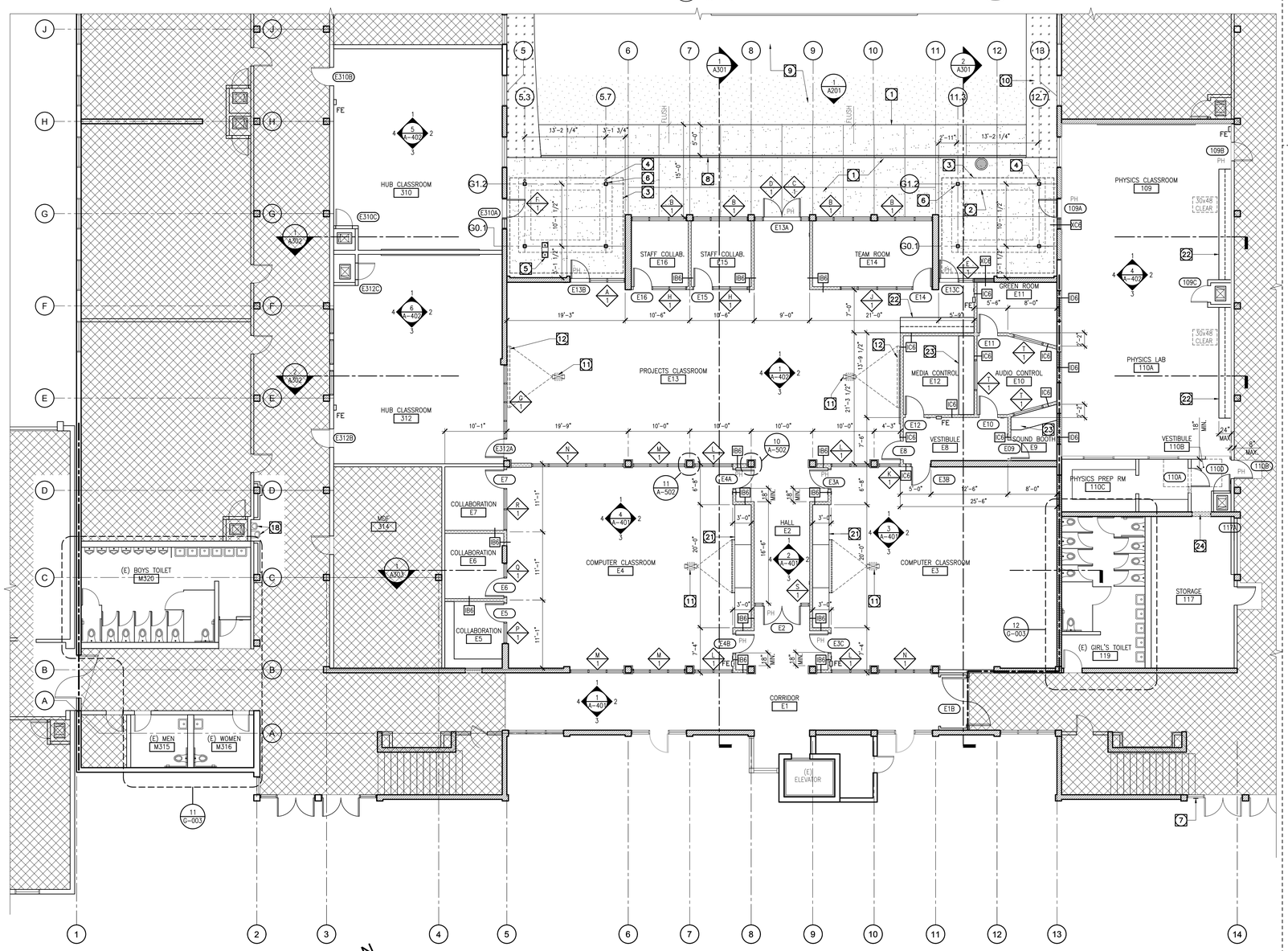

1 IMPROVEMENT FLOOR PLAN
1/8" = 1'-0"

LEGEND

- (E) WALL TO REMAIN
- (E) CONC. WALL
- NON-RATED INTERIOR WALL
- (E) 2 HR RATED WALL
- CEM. PLASTER WALL W/ 6" X 16 GA MTL. STUDS @ 16" O.C.
- SHADED AREA NOT IN SCOPE OF WORK
- RESTROOM ### — ROOM NAME & NUMBER (TAG)
- G101 — DOOR TAG. SEE DOOR SCHEDULE
- A 1 — WINDOW TAG. SEE WINDOW SCHEDULE
- PH — PANIC HARDWARE
- FE — FIRE EXTINGUISHER CABINET
- ID6 — WALL TAG, SEE SHEET A-502 FOR WALL ASSEMBLIES
  - FRAMING MEMBER SIZE (2=2.5", 4=4", 6=6"...)
  - WALL TYPE DESIGNATION (A, B, C...)
  - INTERIOR (I) OR EXTERIOR (X) WALL ASSEMBLY

GENERAL NOTES

1. REFER TO STRUCTURAL, MECHANICAL & ELECTRICAL DRAWINGS FOR ADDITIONAL INFORMATION.

NOTES (TYPICAL, U.O.N.) 1

1. CONC. PAVEMENT
2. CATCH BASIN
3. MTL. CANOPY ABOVE, SEE DETAIL 2/–
4. DOWNSPOUT, SEE DETAIL 7/A-531
5. HI-LO DRINKING FOUNTAIN, SEE DETAIL 14/AS-101
6. COLUMN, SSD.
7. ACCESSIBLE BUILDING SIGN, SEE DETAIL 1/G-003
8. TRENCH DRAIN, SEE DETAIL 16/AS-101
9. (E) CONC. PAVEMENT, PROTECT.
10. (E) LANDSCAPE, PROTECT.
11. CEILING MOUNTED PROJECTOR, SEE RCP.
12. PROJECTION SCREEN, SEE RCP.
13. ACCESSIBLE EXIT SIGN, SEE DETAIL 3/G-003
14. (E) ROOFTOP MECH. UNITS, SMD.
15. (E) ROOF TO REMAIN, PROTECT.
16. ROOF SYSTEM ASSEMBLY, SEE DETAIL 1/A-531
17. ROOF EXPANSION COVER.
18. (E) HI-LO DRINKING FOUNTAIN, SEE DETAIL 15/G-003
19. MECHANICAL UNIT, SMD & SSD.
20. (E) ROOFING TO REMAIN, PATCH AND REPAIR DUE TO NEW WORK.
21. TEACHING WALL
22. CASEWORK, SEE INTERIOR ELEVATIONS.
23. COUNTERTOP
24. INFILL DOOR OPENING, MATCH FINISHES ADJACENT

SAN RAFAEL CITY SCHOOLS
310 NOVA ALBION WAY
SAN RAFAEL, CA 94903

Terra Linda HS
Innovation Hub

320 Nova Albion Way
San Rafael, CA
94903 (415) 492-3105

Date	Issued For
06/08/2018	DSA SUBMITTAL
11/14/2018	DSA BACKCHECK

HED
417 Montgomery Street
Suite 400
San Francisco, CA
94104 USA

(415) 981-2345

WWW.HED.DESIGN

LICENSED ARCHITECT
michael j. myers
STATE OF CALIFORNIA

2017-03489-000

Improvement
Floor Plan

ADDENDUM 1
A-101

1 REFLECTED CEILING PLAN
1/8" = 1'-0"

LEGEND

- AREA NOT IN THE SCOPE OF WORK
- PENDENT LIGHT FIXTURE, SED
- PENDENT LIGHT FIXTURE, SED
- SURFACE MOUNTED LIGHT FIXTURE, SED
- EXTERIOR LIGHT FIXTURE, SED
- LIGHT FIXTURE, SED
- RETURN REGISTER, SMD
- SUPPLY REGISTER, SMD
- 2x4 SUSPENDED AOUSTICAL CEILING, SEE SHEET A-121
- 2x2 SUSPENDED AOUSTICAL CEILING, SEE SHEET A-121
- METAL SOFFIT PANEL
- GYPSUM WALLBOARD DROPPED & FRAMED CEILING
- (E) SUSPENDED ACOUSTICAL CEILING
- (E) LIGHT FIXTURE
- EXIT SIGN WITH EMERGENCY LIGHTS, SED

NOTES (TYPICAL, U.O.N.)

1. MTL. DECK, PAINT.
2. OPEN TO STRUCTURAL DECK ABOVE, PAINT.
3. MTL. GUTTER.
4. MTL. CANOPY.
5. CEILING-MOUNTED PROJECTOR.
6. PROJECTION SCREEN.
7. CEILING SPEAKER.
8. DOWNSPOUT.
9. EXPANSION JOINT COVER ASSEMBLY.
10. EXPOSED MECH. DUCT, SMD.

SAN RAFAEL CITY SCHOOLS
310 NOVA ALBION WAY
SAN RAFAEL, CA 94903

Terra Linda HS
Innovation Hub

320 Nova Albion Way
San Rafael, CA
94903 (415) 492-3105

Date	Issued For
06/08/2018	DSA SUBMITTAL
11/14/2018	DSA BACKCHECK

HED
417 Montgomery Street
Suite 400
San Francisco, CA
94104 USA

(415) 981-2345

WWW.HED.DESIGN

LICENSED ARCHITECT
michael j. myers
STATE OF CALIFORNIA

2017-03489-000

Reflected
Ceiling Plan

ADDENDUM 1
A-121

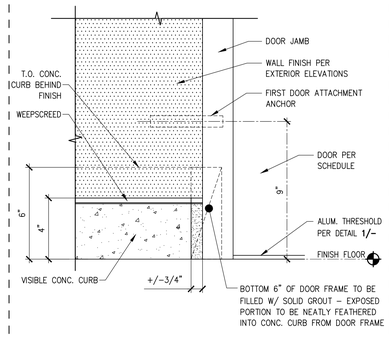

16 EXT. H.M. AT CONC. CURB
SCALE

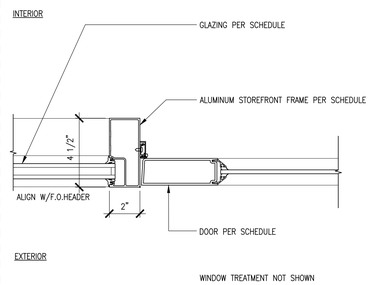

8 EXT. S.F. DOOR/WINDOW-JAMB
3" = 1'-0"

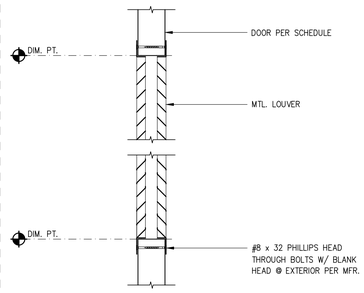

4 DOOR LOUVER
3" = 1'-0"

GENERAL NOTES

1. REFER TO SHEET A-601 FOR DOOR SCHEDULE, DOOR AND DOOR FRAME TYPES.
2. ALL SHEET METAL FLASHING THAT IS DIRECTLY EXPOSED TO THE WEATHER SHALL BE SHOP PRIMED AND SHOP PAINTED.
3. REFER TO SHEET A-521 AND A-522 FOR METAL FRAMING DETAILS.

DOOR NOTES

1. OVERALL DIMENSIONS SHOWN ARE NOMINAL DESIGN DIMENSIONS – SEE DETAILS AND FIELD VERIFY ROUGH OPENING DIMENSIONS TO DETERMINE OVERALL FABRICATION DIMENSIONS

2. HOLLOW METAL FRAME FACE DIMENSION IS 2 INCHES U.O.N. SEE DETAILS FOR FRAME PROFILES

3. ALL HOLLOW METAL FRAMES ARE FIELD PAINTED U.O.N.

4. CONNECT HOLLOW METAL FRAMES AND STOREFRONT LESS THAN 10' TO WALLS AS FOLLOWS:

METAL STUD: STEEL STUD ANCHORS @ 24" O.C. MAX ALL AROUND AND 9" MAX FROM ENDS – (3) PER JAMB MIN. (1) ANCHOR @ HEAD MIDSPAN @ DOORS WIDER THAN 3'-0". (4) #8 X 3/4" FLAT HEAD SHEET METAL SCREWS PER ANCHOR TYPICAL

STRUCTURAL STEEL: HILTI X-EW LOW VELOCITY POWDER ACTUATED THREADED STUDS @ 24" O.C. MAX. ALL AROUND & 6" FROM ENDS. – 2 MIN. PER SIDE – ICC ES ESR 2347

5. ALL DOORS ARE TO BE 1 3/4" THICK UNLESS OTHERWISE NOTED

6. WHERE HOLLOW METAL DOORS ARE PLACED IN ALUMINUM STOREFRONT, PROVIDE "TUBULAR JAMBS" – TYP.

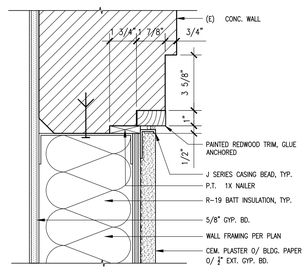

15 CEM. PLAST, AT (E) CONC. WALL
3" = 1'-0"

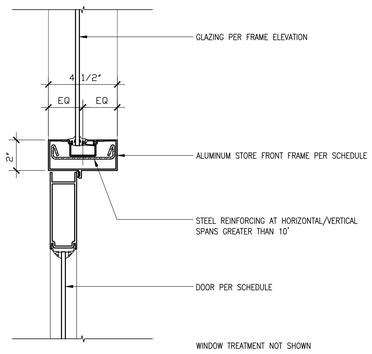

11 INT. S.F. DOOR/WINDOW-JAMB
3" = 1'-0"

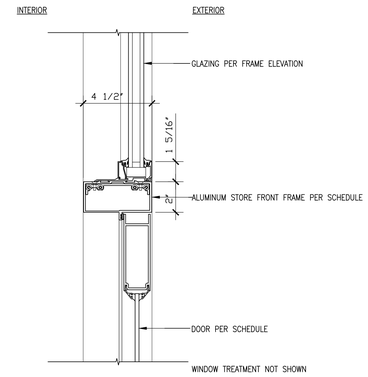

7 EXT. S.F. DOOR-HEAD/TRANSOM-SILL
3" = 1'-0"

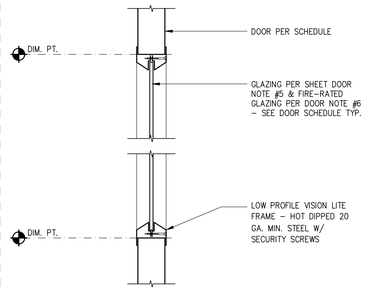

3 DOOR LITE
3" = 1'-0"

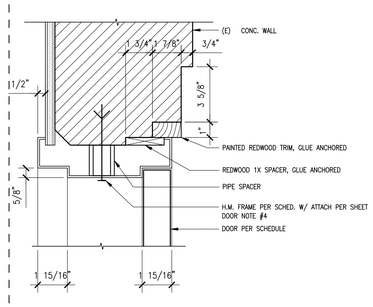

14 EXT. H.M. DOOR FRAME AT (E) CONC.
SCALE

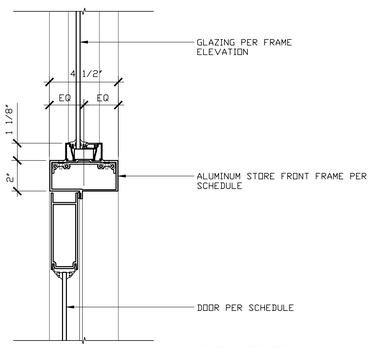

10 INT. S.F. DOOR-HEAD/TRANSOM-SILL
3" = 1'-0"

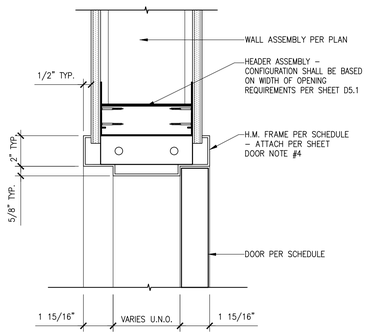

NOTE: DIMENSIONS TYPICAL FOR ALL H.M. FRAMES U.N.O.

6 TYP. INTERIOR H.M. DOOR HEAD
3" = 1'-0"

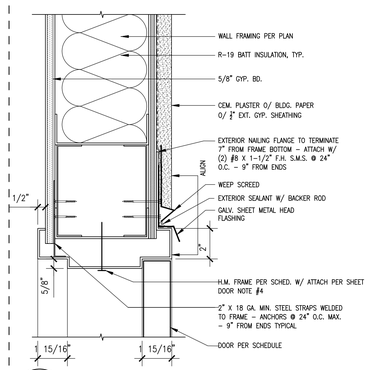

13 H.M. FRAME HEAD DETAIL
SCALE

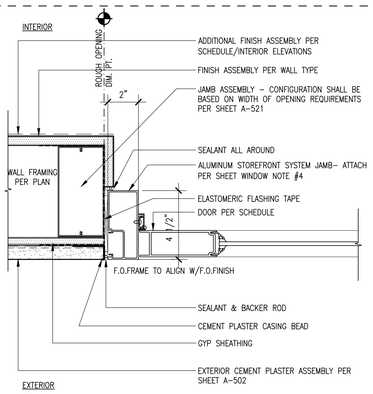

9 EXT. STOREFRONT DOOR JAMB
3" = 1'-0"

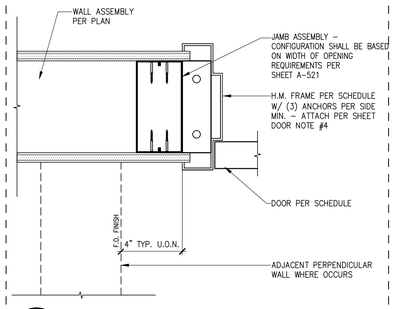

1 DETAIL
SCALE

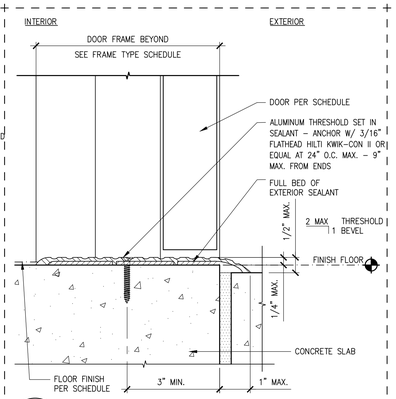

1 TYPICAL DOOR THRESHOLD
6" = 1'-0"

SAN RAFAEL CITY SCHOOLS
310 NOVA ALBION WAY
SAN RAFAEL, CA 94903

Terra Linda HS Innovation Hub

320 Nova Albion Way
San Rafael, CA
94903
(415) 492-3105

Date	Issued For
11/08/2018	DSA SUBMITTAL

HED
417 Montgomery Street
Suite 400
San Francisco, CA
94104 USA
(415) 981-2345
LICENSED ARCHITECT
michael j. myers
C-14092
STATE OF CALIFORNIA

2017-03489-000

Door Details

ADDENDUM 1

A-561

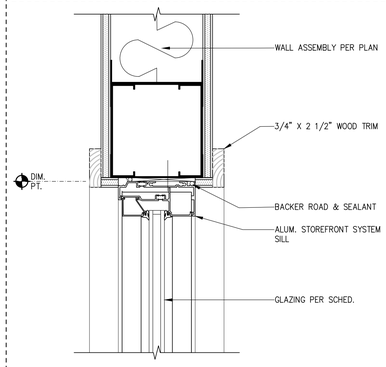

12 INT. STOREFRONT HEAD
3" = 1'-0"

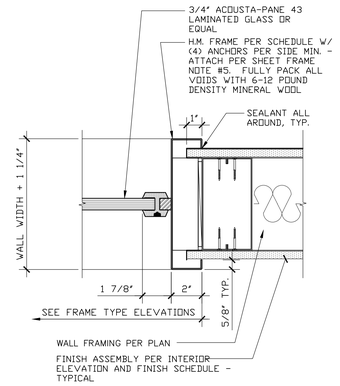

8 INT. ACOUSTIC WINDOW JAMB
SCALE

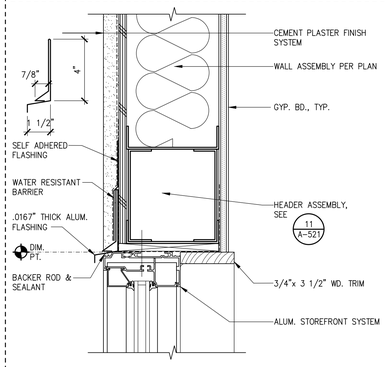

4 EXT. STOREFRONT HEAD
3" = 1'-0"

NOTES:

1. OVERALL DIMENSIONS SHOWN ARE NOMINAL DESIGN DIMENSIONS – SEE DETAILS AND FIELD VERIFY ROUGH OPENING DIMENSIONS TO DETERMINE OVERALL FABRICATION DIMENSIONS.
2. HOLLOW METAL FRAME FACE DIMENSION IS 2 INCHES U.O.N. SEE DETAILS FOR FRAME PROFILES.
3. ALL HOLLOW METAL FRAMES ARE FIELD PAINTED U.O.N.
4. CONNECT HOLLOW METAL FRAMES TO WALLS AS FOLLOWS:
   METAL STUDS: STEEL STUD ANCHORS @24" O.C. MAX. ALL AROUND AND 9" MAX. FROM ENDS. – (3) PER JAMB MIN. (1) ANCHOR @ HEAD MIDSPAN @ DOORS WIDER THAN 3'-0". (4) #8 X 3/4" FLAT HEAD SHEET METAL SCREWS PER ANCHOR TYPICAL.
   CONCRETE: 3/8" DIA. HILTI EXPANSION ANCHOR @ 24" O.C. MAX. – 6" FROM ENDS – (2) PER SIDE MIN.
5. ALL GLAZING IN DOORS AND ALL SIDELITE/TRANSOM GLAZING TO BE LAMINATED GLASS U.O.N.

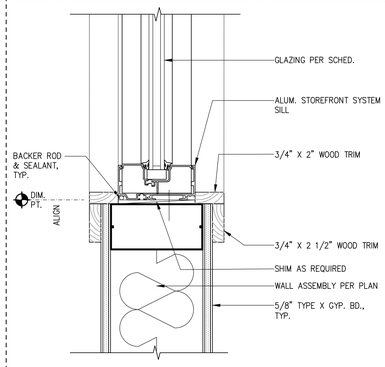

11 INT. STOREFRONT JAMB
3" = 1'-0"

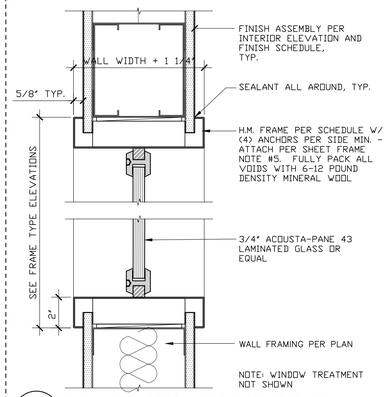

7 INT. ACOUSTIC WINDOW HEAD/SILL
3"=1'-0"

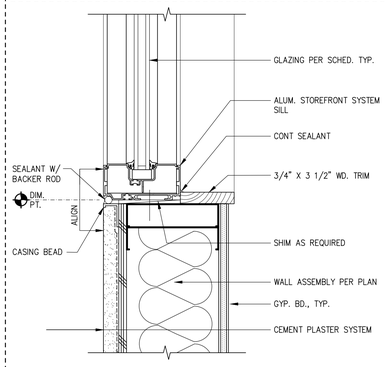

3 EXT. STOREFRONT JAMB
3" = 1'-0"

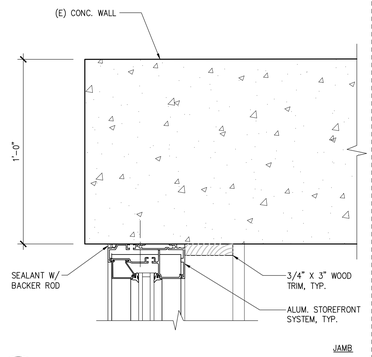

14 EXT. STOREFRONT AT (E) WALL
3" = 1'-0"

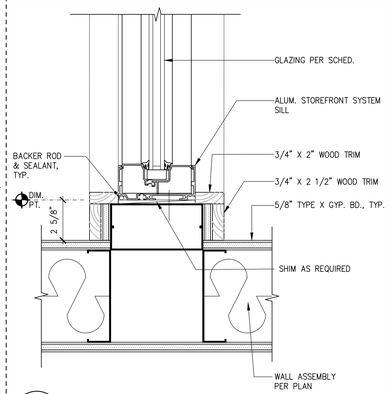

10 INT. STOREFRONT JAMB
3" = 1'-0"

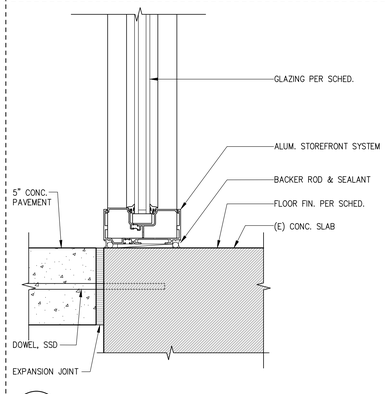

6 EXT. STOREFRONT SILL AT CONC.
3" = 1'-0"

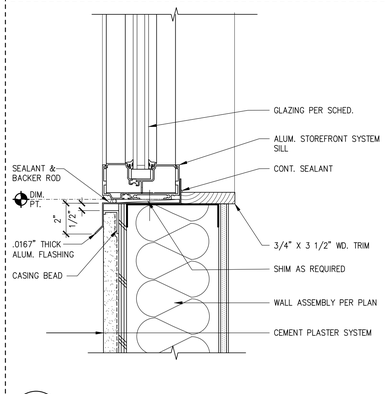

2 EXT. STOREFRONT SILL
3" = 1'-0"

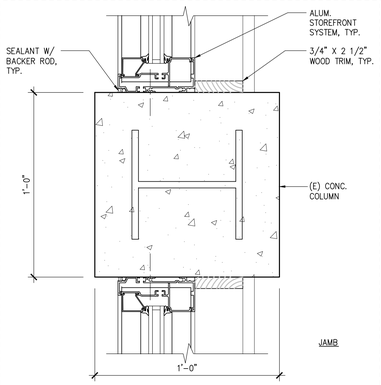

13 EXT. STOREFRONT AT (E) COLUMN
3" = 1'-0"

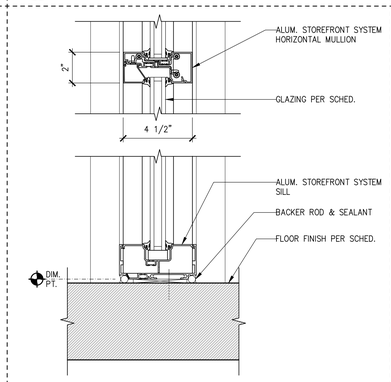

9 INT. STOREFRONT SILL
3" = 1'-0"

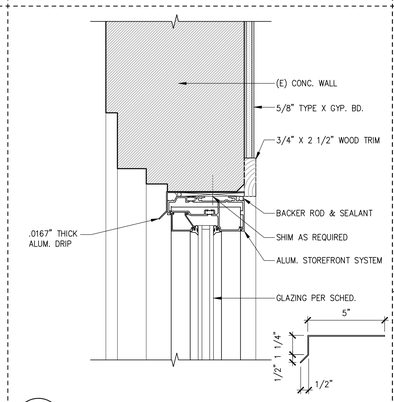

5 EXT. STOREFRONT HEAD AT CONC.
3" = 1'-0"

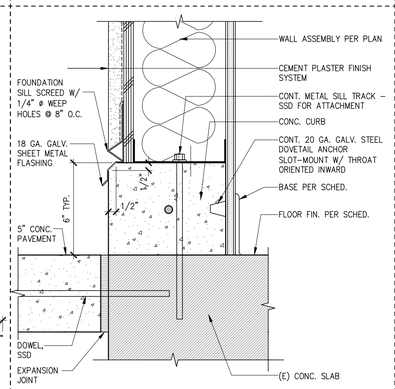

1 EXT. WALL SILL
3" = 1'-0"

SAN RAFAEL CITY SCHOOLS
310 NOVA ALBION WAY
SAN RAFAEL, CA 94903

Terra Linda HS
Innovation Hub

320 Nova Albion Way
San Rafael, CA
94903 (415) 492-3105

Date	Issued For
06/08/2018	DSA SUBMITTAL
11/14/2018	DSA BACKCHECK

HED
417 Montgomery Street
Suite 400
San Francisco, CA
94104 USA
(415) 981-2345
WWW.HED.DESIGN

LICENSED ARCHITECT
michael j. myers
STATE OF CALIFORNIA

2017-03489-000

Window Details

ADDENDUM 1
A-562

FINISH SCHEDULE

ROOM #	ROOM NAME	FLOOR MATL	FLOOR FIN	BASE MATL	BASE FIN	WALL NORTH MATL	WALL NORTH FIN	WALL EAST MATL	WALL EAST FIN	WALL SOUTH MATL	WALL SOUTH FIN	WALL WEST MATL	WALL WEST FIN	CEILING MATL	CEILING FIN	NOTES
E1	CORRIDOR	VCT	FF	RES	FF	GYP	P	GYP	P	GYP	P	GYP	P	ACT/GYP	FF/P	REPLACEMENT FINISHES TO MATCH (E)
E2	HALL	VCT	FF	RES	FF	–	–	GYP/FRP	P/FF	–	–	GYP/FRP	P/FF	GYP	P	PARTIAL HEIGHT FRP PANELING
E3	COMPUTER CLASSROOM	LINO	FF	RES	FF	GYP	P	GYP	P	GYP	P	GYP	P	ACT	FF	
E4	COMPUTER CLASSROOM	LINO	FF	RES	FF	GYP	P	GYP	P	GYP	P	GYP	P	ACT	FF	
E5	COLLABORATION	LINO	FF	RES	FF	GYP	P	GYP	P	GYP	P	GYP	P	ACT	FF	
E6	COLLABORATION	LINO	FF	RES	FF	GYP	P	GYP	P	GYP	P	GYP	P	ACT	FF	
E7	COLLABORATION	LINO	FF	RES	FF	GYP	P	GYP	P	GYP	P	GYP	P	ACT	FF	
E8	VESTIBULE	LINO	FF	RES	FF	GYP	P	GYP	P	GYP	P	GYP	P	GYP	P	
E9	SOUND BOOTH	CPT	FF	RES	FF	GYP	P	GYP	P	GYP	P	GYP	P	GYP	P	
E10	AUDIO CONTROL	CPT	FF	RES	FF	GYP	P	GYP	P	GYP	P	GYP	P	GYP	P	
E11	GREEN ROOM	CPT	FF	RES	FF	GYP	P	GYP	P	GYP	P	GYP	P	GYP	P	
E12	MEDIA CONTROL	CPT	FF	RES	FF	GYP	P	GYP	P	GYP	P	GYP	P	GYP	P	
E13	PROJECTS CLASSROOM	PC	FF	RES	FF	GYP/FRP	P	GYP/FRP	P	GYP/FRP	P	GYP/FRP	P	ES	P	PARTIAL HEIGHT FRP PANELING
E14	TEAM ROOM	PC	FF	RES	FF	GYP	P	GYP	P	GYP	P	GYP	P	ES	P	
E15	STAFF COLLABORATION	PC	FF	RES	FF	GYP	P	GYP	P	GYP	P	GYP	P	ES	P	
E16	STAFF COLLABORATION	PC	FF	RES	FF	GYP	P	GYP	P	GYP	P	GYP	P	ES	P	
109	PHYSICS CLASSROOM	VCT	FF	RES	FF	WC	FF/P	WC	FF/P	WC	FF/P	WC	FF/P	ACT	FF	
110A	PHYSICS LAB	VCT	FF	RES	FF	WC	FF/P	WC	FF/P	WC	FF/P	WC	FF/P	(E)	FF	
110B	VESTIBULE	VCT	FF	RES	FF	WC	FF/P	WC	FF/P	WC	FF/P	WC	FF/P	(E)	FF	
110C	PHYSICS PREP ROOM	VCT	FF	RES	FF	WC	FF/P	WC	FF/P	WC	FF/P	WC	FF/P	(E)	FF	
310	HUB CLASSROOM	(E)	(E)	(E)	(E)	WC	FF/P	WC	FF/P	WC	FF/P	WC	FF/P	(E)	FF	
312	HUB CLASSROOM	VCT	FF	RES	FF	WC	FF/P	WC	FF/P	WC	FF/P	WC	FF/P	(E)/ACT	FF	PATCH ACT AT DEMOLITION AREAS

FINISHES NOTES

1. SEE FLOOR PLANS, REFLECTED CEILING PLANS AND INTERIOR ELEVATIONS FOR ADDITIONAL FINISH AND MATERIAL INFORMATION. THE FINISH SCHEDULE CALLS OUT MAJOR MATERIALS ONLY. CABINETS, MARKER BOARDS, AND TACK PANELING ARE NOT INDICATED IN FINISH SCHEDULE. SEE INTERIOR ELEVATIONS FOR THESE AND OTHER ITEMS NOT CALLED OUT IN THE FINISH SCHEDULE.

2. TRANSITION BETWEEN DISSIMILAR FLOORING MATERIALS SHALL OCCUR UNDER INTERVENING DOORS. SEE ADDEND DETAIL **1/A-591** FOR FLOOR TRANSITION DETAILS.

3. INTERIOR PAINT FINISH – ALL PAINTED SURFACES TO RECEIVE SEMI-GLOSS FINISH UNLESS OTHERWISE NOTED.

4. WHERE TACK PANELING, CASEWORK, MARKERBOARDS, ETC. OCCUR OVER GYPSUM BOARD, DO NOT PAINT GYPSUM BOARD.

5. ALL FLOOR FINISHES SHALL BE FIRM & SLIP RESISTANT IN ACCORDANCE WITH **C.B.C. SECTION 11B-302/.**

2 FINISH SCHEDULE

DOOR AND FRAME SCHEDULE

DOOR #	SIZE	THK	TYPE	MATL	FIN	INT/EXT	RATING MIN	HDWR GRP	HDWR PH	FRAME TYPE	FRAME MATL	FRAME FIN	DETAIL HEAD	DETAIL JAMB	DETAIL SILL	SIGNAGE PER (G-003)	NOTES
E1B	(E) PAIR 3'0"x7'0"	1 3/4"	(E)	HM	P	INT	(E)	06	(E)	(E) F1	HM	P	(E)	(E)	(E)	–	
E2	PAIR 3'0"x7'0"	1 3/4"	B	AL	FF	INT	–	05	Y	E F	AL	FF	10/A-561	11/A-561	1/A-591	2 & 3	"EXIT ROUTE"
E3A	3'0"x7'0"	1 3/4"	C	SCW	P	INT	–	04	Y	F1	HM	P	6/A-561	5/A-561	1/A-591	2 & 3	
E3B	3'0"x7'0"	1 3/4"	C	SCW	P	INT	–	10	N	F1	HM	P	6/A-561	5/A-561	1/A-591	2 & 3	PROVIDE ACOUSTIC GASKETING. "EXIT ROUTE".
E3C	3'0"x7'0"	1 3/4"	C	SCW	P	INT	–	04	Y	F1	HM	P	6/A-561	5/A-561	1/A-591	2 & 3	"EXIT ROUTE"
E4A	3'0"x7'0"	1 3/4"	C	SCW	P	INT	–	04	Y	F1	HM	P	6/A-561	5/A-561	1/A-591	2 & 3	"EXIT ROUTE"
E4B	3'0"x7'0"	1 3/4"	C	SCW	P	INT	–	04	Y	F1	HM	P	6/A-561	5/A-561	1/A-591	2 & 3	"EXIT ROUTE"
E5	3'0"x7'0"	1 3/4"	A	SCW	P	INT	–	09	N	E F	AL	FF	10/A-561	11/A-561	1/A-591	2	
E6	3'0"x7'0"	1 3/4"	A	SCW	P	INT	–	09	N	E F	AL	FF	10/A-561	11/A-561	1/A-591	2	
E7	3'0"x7'0"	1 3/4"	A	SCW	P	INT	–	09	N	E F	AL	FF	10/A-561	11/A-561	1/A-591	2	
E8	3'0"x7'0"	1 3/4"	C	SCW	P	INT	–	10	N	F1	HM	P	6/A-561	5/A-561	1/A-591	2 & 3	PROVIDE ACOUSTIC GASKETING. "EXIT ROUTE"
E9	3'0"x7'0"	1 3/4"	C	SCW	P	INT	–	11	N	F1	HM	P	6/A-561	5/A-561	1/A-591	2	PROVIDE ACOUSTIC GASKETING
E10	3'0"x7'0"	1 3/4"	C	SCW	P	INT	–	11	N	F1	HM	P	6/A-561	5/A-561	1/A-591	2	PROVIDE ACOUSTIC GASKETING
E11	3'0"x7'0"	1 3/4"	C	SCW	P	INT	–	11	N	F1	HM	P	6/A-561	5/A-561	1/A-591	2	PROVIDE ACOUSTIC GASKETING
E12	3'0"x7'0"	1 3/4"	C	SCW	P	INT	–	11	N	F1	HM	P	6/A-561	5/A-561	1/A-591	2	PROVIDE ACOUSTIC GASKETING
E13A	PAIR 3'0"x7'0"	1 3/4"	B	AL	FF	EXT	–	01	Y	E F	AL	FF	7/A-561	8&9/A-561	1/A-561	1 & 3	
E13B	3'0"x7'0"	1 3/4"	B	AL	FF	EXT	–	02A	Y	E F	AL	FF	7/A-561	8&9/A-561	1/A-561	2 & 3	
E13C	3'0"x7'0"	1 3/4"	B	AL	FF	EXT	–	02A	Y	E F	AL	FF	7/A-561	8&9/A-561	1/A-561	2 & 3	
E14	3'0"x7'0"	1 3/4"	A	SCW	P	INT	–	08	N	E F	AL	FF	10/A-561	11/A-561	1/A-591	2	
E15	3'0"x7'0"	1 3/4"	A	SCW	P	INT	–	08	N	E F	AL	FF	10/A-561	11/A-561	1/A-591	2	
E16	3'0"x7'0"	1 3/4"	A	SCW	P	INT	–	08	N	E F	AL	FF	10/A-561	11/A-561	1/A-591	2	
109A	3'0"x7'0"	1 3/4"	B	AL	FF	EXT	90 MIN	02	Y	E F	AL	FF	7/A-561	8&9/A-561	1/A-561	2 & 3	
109B	(E) 3'0"x7'0"	1 3/4"	(E) C	(E) SCW	P	INT	20 MIN	14	Y	(E) F1	(E) HM	P	(E)	(E)	(E)	2 & 3	"EXIT ROUTE"
109C	(E) 3'0"x5'0"	1 3/4"	(E)	(E)	P	INT	–	12	N	(E) F1	(E) HM	P	(E)	(E)	(E)	–	
110A	(E) 3'0"x7'0"	1 3/4"	D	SCW	P	INT	–	13	N	(E) F1	(E) HM	P	(E)	(E)	(E)	2	
110B	(E) 3'0"x7'0"	1 3/4"	(E) C	(E) SCW	P	INT	20 MIN	14	Y	(E) F1	(E) HM	P	(E)	(E)	(E)	2 & 3	"EXIT ROUTE"
110D	(E) 3'0"x5'0"	1 3/4"	(E)	(E)	P	INT	–	12	N	(E) F1	(E) HM	P	(E)	(E)	(E)	–	
117	3'0"x7'0"	1 3/4"	A	SCW	P	INT	20 MIN	14	N	F1	HM	P	6/A-561	5/A-561	1/A-591	2	
E310A	3'0"x7'0"	1 3/4"	B	AL	FF	EXT	–	03	N	E F	AL	FF	7/A-561	8&9/A-561	1/A-561	2	
E310B	3'0"x7'0"	1 3/4"	(E)	(E)	P	INT	–	16	N	(E) F1	(E) HM	P	(E)	(E)	(E)	2	
E310C	(E) 3'0"x5'0"	1 3/4"	(E)	(E)	P	INT	–	12	N	(E) F1	(E) HM	P	(E)	(E)	(E)	–	
E312A	3'0"x7'0"	1 3/4"	B	AL	FF	INT	–	07	N	E F	AL	FF	10/A-561	11/A-561	1/A-591	2	
E312B	(E) 3'0"x7'0"	1 3/4"	(E)	(E)	P	INT	–	16	N	(E) F1	(E) HM	P	(E)	(E)	(E)	2	
E312C	(E) 3'0"x5'0"	1 3/4"	(E)	(E)	P	INT	–	12	N	(E) F1	(E) HM	P	(E)	(E)	(E)	–	

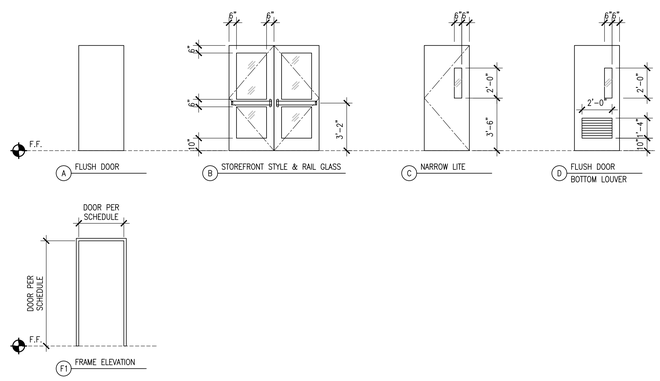

1 DOOR AND FRAME SCHEDULE
1/4" = 1'-0"

FINISH SCHEDULE MATERIAL LEGEND	
ACP	ACOUSTICAL CEILING PANEL
ACP2	BLACK ACOUSTICAL CEILING PANEL
ACP3	BLACK ACOUSTICAL BOARD
AL	ALUMINUM
AWP	ACOUSTICAL WALL PANELING
CONC	CONCRETE
CMU	CONCRETE MASONRY UNIT
CPT	CARPET
CT	CERAMIC TILE
EP	EPOXY FLOORING
ES	EXPOSED STRUCTURE
ETZ	EPOXY TERRAZZO FLOORING
EXT	EXTERIOR
FF	FACTORY FINISH
FIN	FINISH
FRP	FIBERGLASS REINFORCED PLASTIC PANELING
GL	GLASS
GYP	GYPSUM BOARD
HM	HOLLOW METAL
INT	INTERIOR
IRGB	IMPACT RESISTANT GYPSUM BOARD
LINO	LINOLEUM
MATL	MATERIAL
P	PAINT
PC	POLISHED CONCRETE
PLP	PLASTIC LAMINATE PANELING
PLY	PLYWOOD
RES	RESILIENT RUBBER BASE
SCW	SOLID CORE DOOR
SLR	CONCRETE SEALER
SS	STAINLESS STEEL
TP	TRANSPARENT FINISH
VRB	VENTED RESILIENT RUBBER BASE
WC	WALLCOVERING
WD	WOOD
WDM	WOOD FLOORING SYSTEM WITH MASONITE

DOOR NOTES:

1. OVERALL DIMENSIONS SHOWN ARE NOMINAL DESIGN DIMENSIONS – SEE DETAILS AND FIELD VERIFY ROUGH OPENING DIMENSIONS TO DETERMINE OVERALL FABRICATION DIMENSIONS.

2. HOLLOW METAL FRAME FACE DIMENSION IS 2 INCHES U.O.N. SEE DETAILS FOR FRAME PROFILES.

3. ALL HOLLOW METAL FRAMES ARE FIELD PAINTED U.O.N.

4. CONNECT HOLLOW METAL FRAMES TO WALLS AS FOLLOWS:
   METAL STUDS: STEEL STUD ANCHORS @24" O.C. MAX. ALL AROUND AND 9" MAX. FROM ENDS. – (3) PER JAMB MIN. (1) ANCHOR @ HEAD MIDSPAN @ DOORS WIDER THAN 3'-0". (4) #8 X 3/4" FLAT HEAD SHEET METAL SCREWS PER ANCHOR TYPICAL.
   CONCRETE: 3/8" DIA. HILTI EXPANSION ANCHOR @ 24" O.C. MAX. – 6" FROM ENDS – (2) PER SIDE MIN.

5. ALL GLAZING IN DOORS AND ALL SIDELITE/TRANSOM GLAZING TO BE LAMINATED GLASS U.O.N.

6. ALL GLAZING IN FIRE RATED DOORS TO BE FIRE RESISTANT SAFETY GLASS U.O.N.

7. ALL DOORS ARE TO BE 1 3/4" THICK U.O.N.

DOOR SCHEDULE NOTES:

A. FOR DOOR HARDWARE (HDWR) REFER TO **SPECIFICATIONS.**

B. ALL EXTERIOR DOORS ARE TO OPEN 180 DEGREES DEPENDING ON THEIR LOCATION U.O.N.

C. PROVIDE BACKING @ ALL WALL MOUNTED DOOR STOP LOCATIONS.

D. ALL DOORS IN PATH OF TRAVEL SHALL:
- PROVIDE 32" OF CLEAR ACCESS
- BE PROVIDED W/ LEVER TYPE LOCKS & LATCHES
- BE OPERATED W/ A MAX. FORCE OF 5# INTERIOR AND 5# EXTERIOR
- HAVE MAX. THRESHOLD HEIGHT OF 1/2" IF BEVELED 1:2

DOOR SCHEDULE MATERIAL LEGEND	
AL	ALUMINUM
EXT	EXTERIOR
FF	FACTORY FINISH
FIN	FINISH
GL	GLASS
GRP	GROUP
HDWR	HARDWARE
HM	HOLLOW METAL
INT	INTERIOR
MATL	MATERIAL
P	PAINT
PH	PANIC HARDWARE
SCW	SOLID CORE DOOR
SS	STAINLESS STEEL
STL	STEEL
THK	THICKNESS
TP	TRANSPARENT FINISH

SAN RAFAEL CITY SCHOOLS
310 NOVA ALBION WAY
SAN RAFAEL, CA 94903

Terra Linda HS Innovation Hub

320 Nova Albion Way
San Rafael, CA
94903 (415) 492-3105

Date	Issued For
06/08/2018	DSA SUBMITTAL
11/14/2018	DSA BACKCHECK

HED
417 Montgomery Street
Suite 400
San Francisco, CA
94104 USA

(415) 981-2345

WWW.HED.DESIGN

LICENSED ARCHITECT
michael j. myers
STATE OF CALIFORNIA

2017-03489-000

Schedules, Door and Frame Types

ADDENDUM 1

A-601

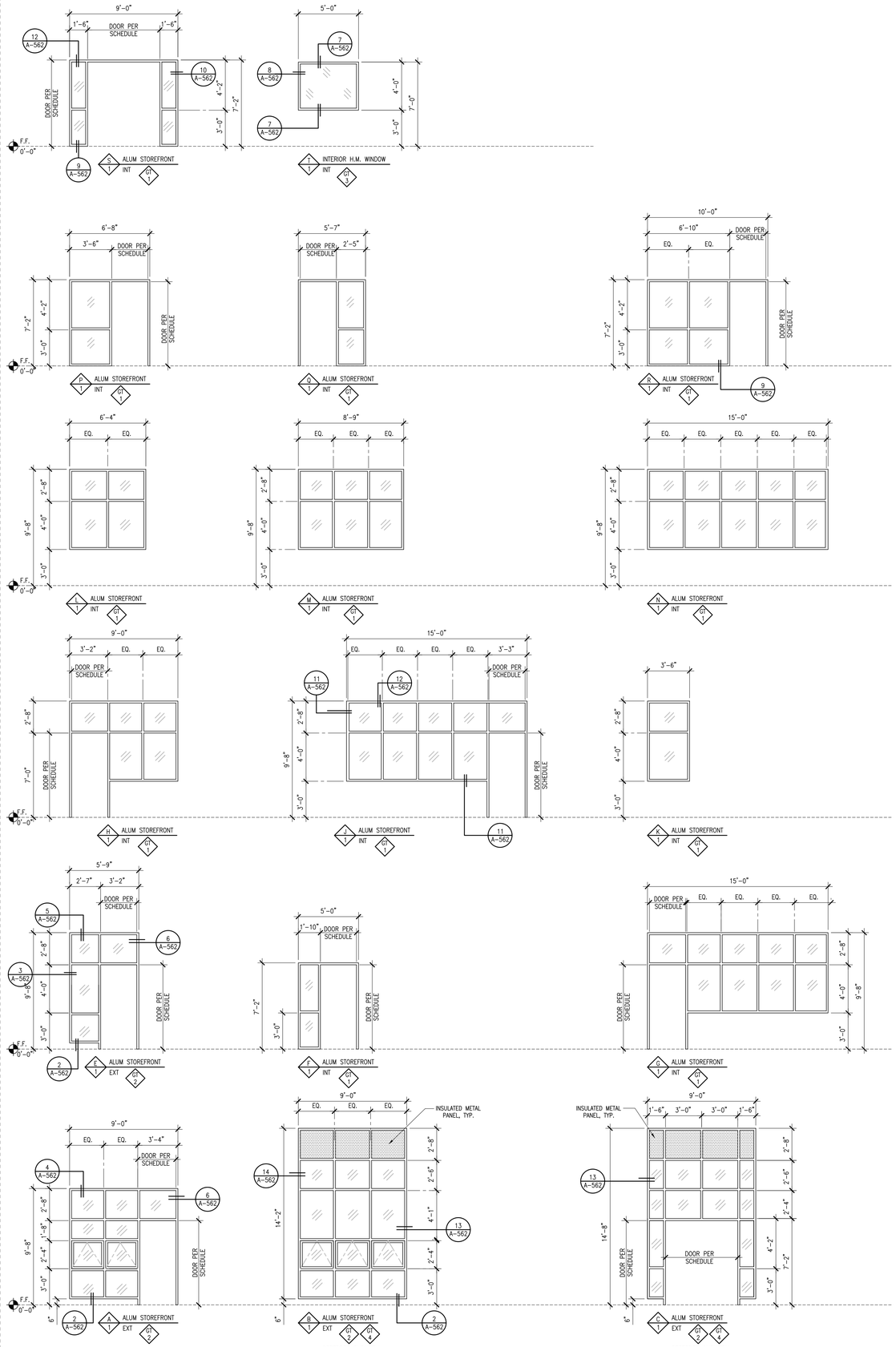

1 WINDOW TYPES
1/4" = 1'-0"

GENERAL NOTES:

1. OVERALL DIMENSIONS SHOWN ARE NOMINAL DESIGN DIMENSIONS. FIELD VERIFY ROUGH OPENING DIMENSIONS TO DETERMINE OVERALL FABRICATION

2. ALL HOLLOW METAL WINDOW GLAZING STOPS ARE TO BE INSTALLED AT THE INTERIOR OR MOST PRIVATE SIDE

3. WINDOW FLASHING SHALL BE SET IN A CONTINUOUS BED OF SEALANT

4. CONNECT WINDOWS AS FOLLOWS:

METAL: #12 x 2" STAINLESS STEEL SELF TAPPING SHEET METAL SCREWS @ 16" O.C. MAX. ALL AROUND & 6" FROM ENDS – 2 MIN. PER SIDE

CONCRETE MASONRY: 3/16" DIA. HILTI KWIK–CON II SCREWS @ 24" O.C. MAX. – 9" MAX. FROM ENDS WITH 1–1/4" MIN. EMBEDMENT (STAGGERED) PER ICBO #5259

5. WINDOW SILL PANS TO HAVE A REAR VERTICAL LEG WITH END DAMS – SEALED AT END TERMINATION. ALL SILL PANS TO BE FILLED WITH WATER AND TESTED TO BE WATER TIGHT PRIOR TO INSTALLATION

6. ALL PENETRATIONS THROUGH WINDOW SILL PANS SHALL BE SEALED WATERTIGHT

7. ALL ATTACHMENTS MUST ACCOMMODATE THERMAL AND DYNAMIC MOVEMENT

8. ALL INTERRUPTIONS IN FLASHINGS MUST BE SEALED

9. EXTERIOR AND INTERIOR WINDOW PERIMETER SEALANT SHALL BE CONTINUOUS AND IN THE SAME PLANE

10. CONNECT HOLLOW METAL FRAMES TO WALLS AS FOLLOWS:

11. ALL GLAZING IN DOORS AND ALL SIDELITE/TRANSOM GLAZING TO BE LAMINATED GLASS U.O.N.

12. OPERABLE WINDOWS TO BE PROVIDED WITH ACCESSIBLE CONTROLS WITH A MAXIMUM 5 LBS FORCE FOR OPERATION AND A 30"X48" CLEAR FLOOR SPACE.

13. BLACKOUT ROLLER SHADES TO BE ON ALL INTERIOR AND EXTERIOR WINDOWS

GLAZING SCHEDULE	
G1 1	CLEAR INSULATING GLASS
G1 2	LOW–E COATED CLEAR INSULATING GLASS
G1 3	LAMINATED GLASS
G1 4	INSULATED METAL PANEL

310 NOVA ALBION WAY
SAN RAFAEL, CA 94903

Terra Linda HS Innovation Hub

320 Nova Albion Way
San Rafael, CA
94903
(415) 492-3105

Date	Issued For
06/08/2018	DSA SUBMITTAL
11/14/2018	DSA BACKCHECK

HED
417 Montgomery Street
Suite 400
San Francisco, CA
94104 USA

(415) 981-2345

WWW.HED.DESIGN

LICENSED ARCHITECT
michael j. myers
STATE OF CALIFORNIA

2017-03489-000

Window Schedule

ADDENDUM 1

A-602

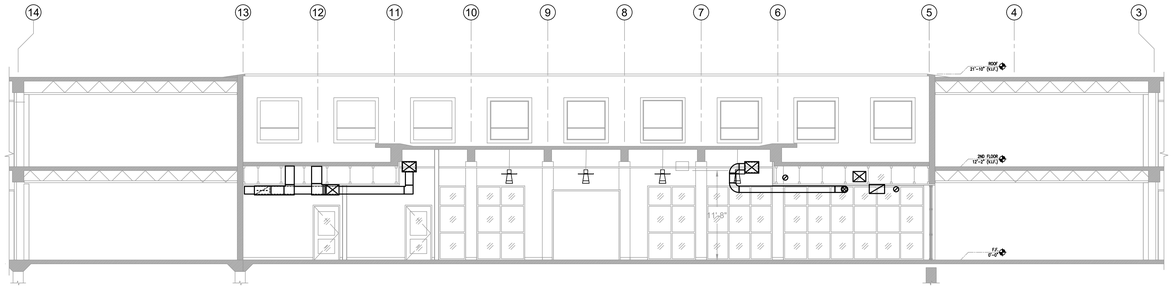

2 MECHANICAL SECTION -1
1/8" = 1'-0"

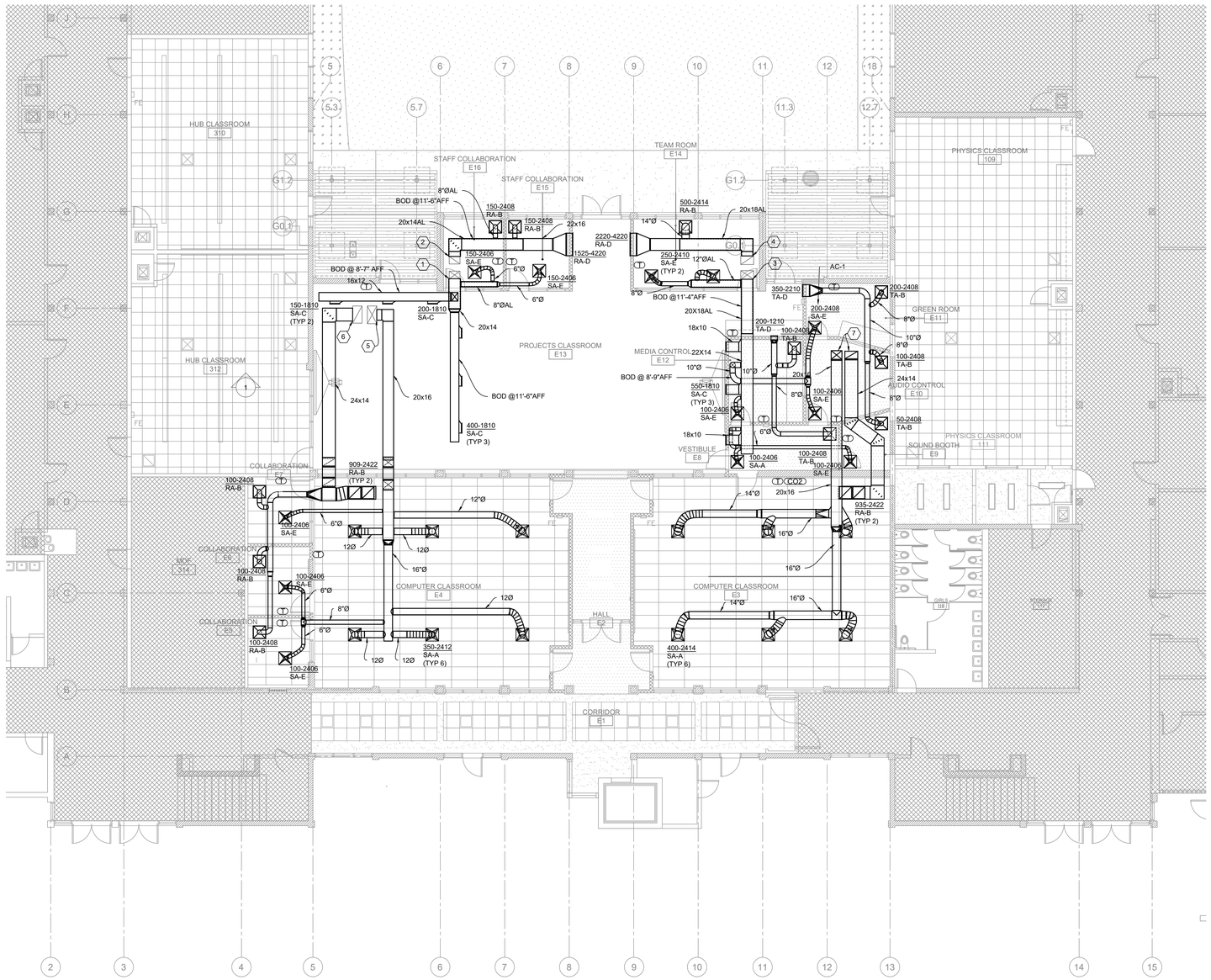

1 MECHANICAL FLOOR PLAN
1/8" = 1'-0"

	SHEET NOTES
1	CONNECT NEW 20x14AL SUPPLY DUCT TO EXISTING 20x14 SUPPLY DUCT
2	CONNECT NEW 20x14AL RETURN DUCT TO EXISTING 20x14 RETURN DUCT
3	CONNECT NEW 20x18AL SUPPLY DUCT TO EXISTING 24x16 SUPPLY DUCT
4	CONNECT NEW 20x18AL RETURN DUCT TO EXISTING 24x16 RETURN DUCT
5	CONNECT NEW 20x16AL SUPPLY DUCT TO EXISTING 24x14 SUPPLY DUCT
6	CONNECT NEW 24x14AL RETURN DUCT TO EXISTING 24x14 RETURN DUCT
7	CONNECT NEW 20x16 SUPPLY DUCT AND 24x14 RETURN DUCT TO NEW AC-E4 ON ROOF

SAN RAFAEL CITY SCHOOLS
310 NOVA ALBION WAY
SAN RAFAEL, CA 94903

Terra Linda HS
Innovation Hub

320 Nova Albion Way
San Rafael, CA
94903
(415) 492-3105

Date	Issued For
06/08/18	DSA SUBMITTAL

H&M
MECHANICAL GROUP
8517 Earhart Rd, Suite 230
Oakland, CA 94621
510-569-2000

HED
417 Montgomery Street
Suite 400
San Francisco, CA
94104 USA
(415) 981-2345
WWW.HED.DESIGN

MECHANICAL
FLOOR PLAN AND
SECTION
ADDENDUM 1

M201

SHEET NOTES:

1. PROVIDE STANCHION SUPPORT AND MOUNT SURFACE RACEWAY @±18" A.F.F.
2. COORDINATE WITH THE ARCHITECT FOR EXACT MOUNTING HEIGHT.
3. POWER FOR CEILING MOUNT PROJECTOR.
4. POWER FOR MONITOR.
5. POWER FOR DOOR OPERATION.
6. CEILING MOUNTED OUTLET FOR SPEAKER.
7. POWER FOR PROJECTION SCREEN.
8. ALL CIRCUITS IN THIS AREA TO BE CONNECTED FROM (E) PANEL "3LA"

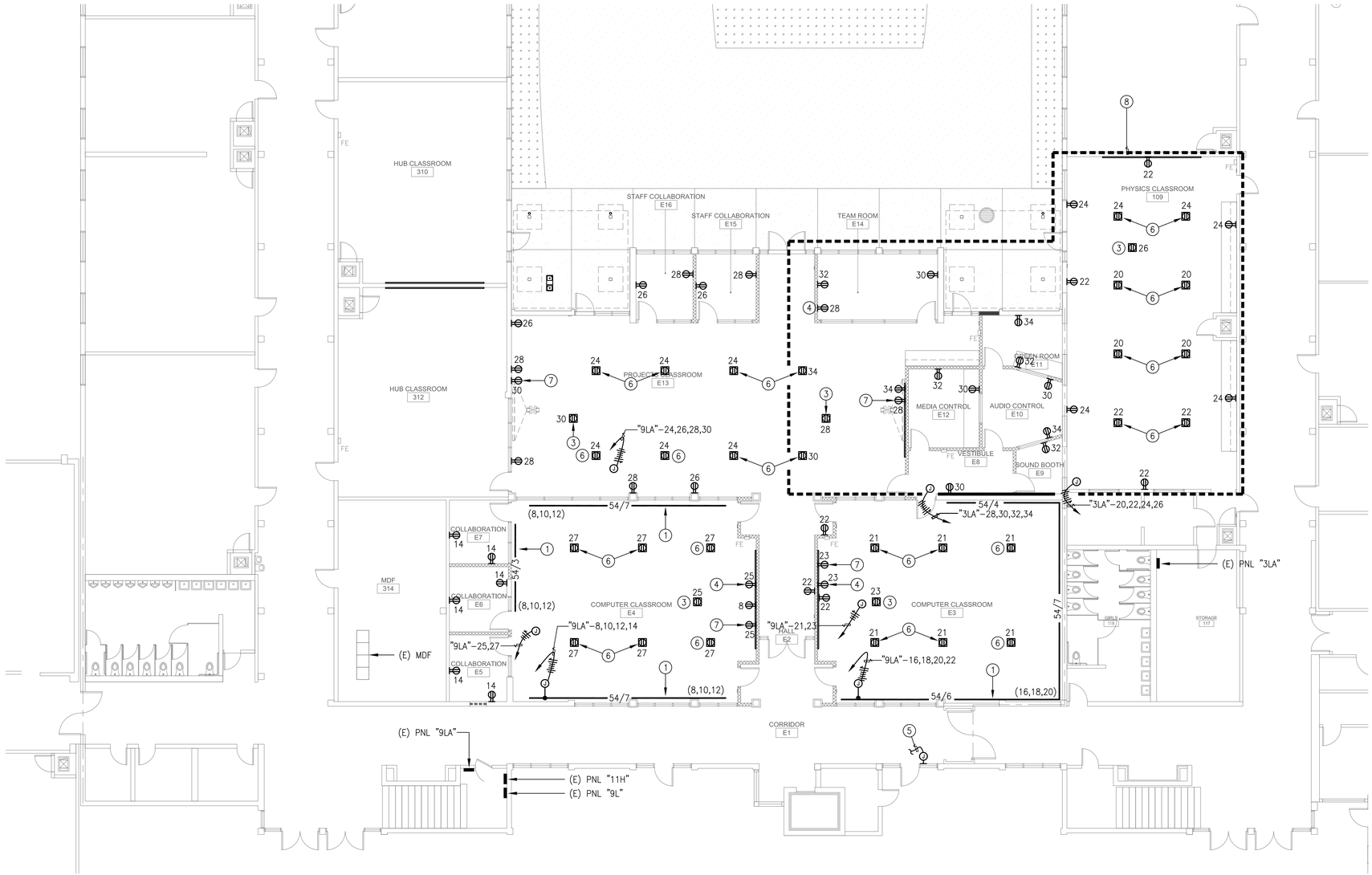

1 E2.1 POWER PLAN

SCALE: 1/8"= 1'-0"

SAN RAFAEL CITY SCHOOLS
310 NOVA ALBION WAY
SAN RAFAEL, CA 94903

Terra Linda HS Innovation Hub

320 Nova Albion Way
San Rafael, CA
94903 (415) 492-3105

Date	Issued For
06/08/18	DSA Sumittal
10/17/18	DSA Back check

Alliance Engineering Consultants, Inc.
4700 Patrick Henry Drive, Bldg. 10
Santa Clara, CA 95054
phone: (408) 970-8888
fax: (408) 970-8889
www.aec-engineers.com

PROJECT NO. 101-18-03

REGISTERED PROFESSIONAL ENGINEER
KENNETH S. NIGAI
No. 11537
Exp. 6/30/19
ELECT.
STATE OF CALIFORNIA

HED
417 Montgomery Street
Suite 400
San Francisco, CA
94104 USA

(415) 981-2345

WWW.HED.DESIGN

2017-03489-000

POWER PLAN

ADDENDUM 1

E2.1

EQUIPMENT LIST (OR EQUAL)

ROOM E3 COMPUTER CLASSROOM:

• 80" 16-7 monitor	SHARP PN-LE801
• Monitor Mount	CHIEF XTM1U
• Projector/Ceiling	EPSON POWERLITE 990
• Ceiling-mount for projector	CHIEF KITES003
• Electric projection screen	DA-LITE 70068 TENSIONED ADVANTAGE DELUX
• Sound system for monitor	POLK MagniFI MAXAM 8214
• Sound System for projector	DUKANE Sound Collar
• Display Inputs/Wall	Dual EXTRON WPB109
• Cable install/Kits	EXTRON

ROOM E4 COMPUTER CLASSROOM:

• 80" 16-7 monitor	SHARP PN-LE801
• Monitor Mount	CHIEF XTM1U
• Projector/Ceiling	EPSON POWERLITE 990
• Ceiling-mount for projector	CHIEF KITES003
• Electric projection screen	DA-LITE 70068 TENSIONED ADVANTAGE DELUX
• Sound system for monitor	POLK MagniFI MAXAM 8214
• Sound System for projector	DUKANE Sound Collar
• Display Inputs/Wall	Dual EXTRON WPB109
• Cable install/Kits	EXTRON

ROOM E13 PROJECTS CLASSROOM:

• Two ceiling-mount projectors	EPSON POWERLITE 990
• Ceiling Mounts/Projectors	CHIEF KITES003
• Two electric projection screens	DA-LITE 70068 TENSIONED ADVANTAGE DELUX
• Sound system for each projector	DUKANE Sound Collar
• Display Inputs/Wall	EXTRON WPB109
• Cable Install Kits	EXTRON

ROOM E14 TEAM ROOM:

• 80" monitor	SAMSUNG MODEL (CONSUMER GRADE)

SHEET NOTES:

1. DATA OUTLET FOR CEILING MOUNT PROJECTOR. COORDINATE WITH ARCHITECT FOR EXACT LOCATION.
2. 1 1/4"C (LOW VOLTAGE)
3. 1 1/2"C (LOW VOLTAGE)
4. (3) 2"C (LOW VOLTAGE)
5. (5) 2"C
6. PROVIDE 3" J-HOOKS FOR LOW VOLTAGE CABLE SUPPORT ALONG DOUBLE LINES AT 4FT ON CENTER.
7. PROVIDE 10"x8"x6" NEMA 1 PULLBOX AND SECURE ON THE WALL.
8. CONNECT (N) DATA CABLES IN (E) IDF PATCH PANEL. PROVIDE ALL NECESSARY CAT 6 PATCH CORD AS REQUIRED AND ALL OTHER DATA COMPONENTS FOR A COMPLETE INSTALLATION.
9. CONNECT (N) DATA CABLES IN (E) PATCH PANEL SPARE PORTS. PROVIDE ADDITIONAL CAT 6 PATCH PANEL (MODULAR), CAT 6/CAT6A PATCH CORD AS REQUIRED FOR A COMPETE INSTALLATION.
10. 1 1/4"C (CLOCK/SPEAKER)
11. RUN CONDUIT ABOVE CEILING AND PROVIDE CONDUIT SUPPORT AT 8FT. INTERVAL MAXIMUM.
12. IF (E) PATHWAY FOR CLOCK/PA CAN BE RE-USED, THEN NOTE (11) IS NOT REQUIRED.
13. FIELD VERIFY AND UTILIZE (E) CABLE LADDER TO RUN (N) CABLES.
14. RELOCATED ELECTRICAL ITEM AS NOTED BY BY NOTE 3 ON SHEET E2.0
15. DATA OUTLET FOR MONITOR.
16. (1) HDMI & (1) VGA INPUT FOR MONITOR.
17. CEILING SPEAKER CONNECTED TO PROJECTOR/MONITOR.
18. CEILING SPEAKER CONNECTED TO PROJECTOR.
19. ADD (1) HDMI OUTLET AND CONNECT TO (E) PROJECTOR.
20. (1) HDMI & (1) VGA INPUT FOR PROJECTOR.
21. COORDINATE WITH PROJECTOR CONTRACTOR PRIOR TO ROUGH-IN.
22. PROVIDE 1"C FROM HDMI TO (E) PROJECTOR. FIELD VERIFY FOR (E) LOCATION.

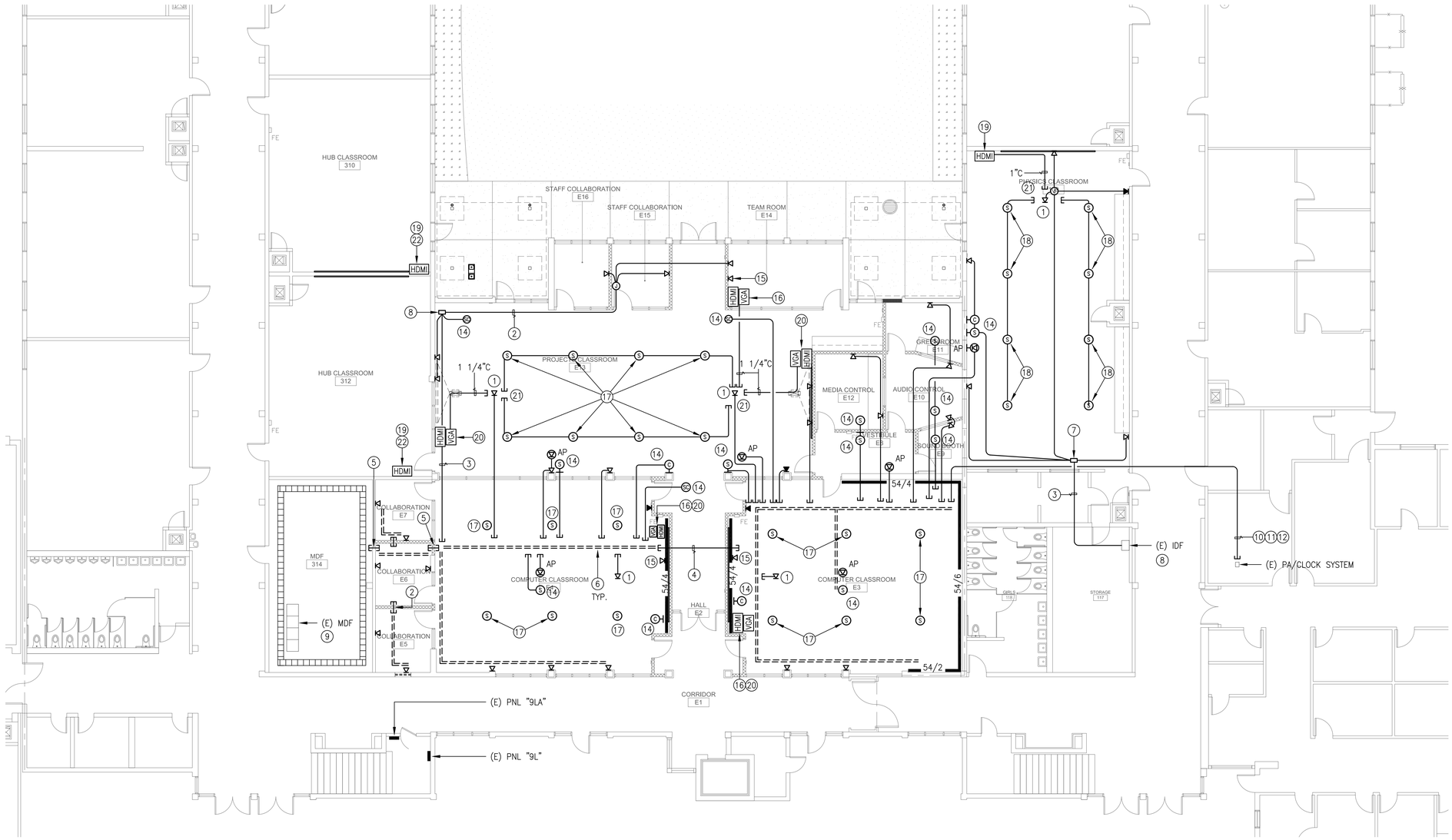

1 E3.1 SIGNAL PLAN

SCALE: 1/8"= 1'-0"

SAN RAFAEL CITY SCHOOLS
310 NOVA ALBION WAY
SAN RAFAEL, CA 94903

Terra Linda HS
Innovation Hub

320 Nova Albion Way
San Rafael, CA
94903 (415) 492-3105

Date	Issued For
06/08/2018	DSA Sumittal
11/14/2018	DSA Back check

Alliance Engineering Consultants, Inc.
4701 Patrick Henry Drive, Bldg. 10
Santa Clara, CA 95054
phone (408) 970-9888
fax (408) 970-9316
www.aec-engineers.com

PROJECT NO. 101-18-03

REGISTERED PROFESSIONAL ENGINEER
KENNETH S. INGAI
No. 11537
Exp. 6/30/19
ELECT.
STATE OF CALIFORNIA

FILE#: 21-H1 PTN#: 65466-28

IDENTICATION STAMP
DIV. OF THE STATE ARCHITECT
APP#: 01-117586
AC___FLS___SS___
DATE___

HED
417 Montgomery Street
Suite 400
San Francisco, CA
94104 USA

(415) 981-2345

WWW.HED.DESIGN

2017-03489-000

SIGNAL PLAN

ADDENDUM 1

E3.1